DEC 23 1946

Large.

PERIODICAL ROOM
GENERAL LIBRARY
UNIV. OF MICH.

ARMY NAVY

THE GAZETTE OF THE LAND SEA AND AIR

SPOKESMAN OF THE SERVICES SINCE 1863

JOURNAL

VOL. LXXXIV—No. 16—WHOLE No. 3354
Ent. as 2nd class matter at P. O. at Washington, D. C. Add. entry Baltimore, Md., under Act of March 3, 1879.

Washington, D. C., December 21, 1946

SINGLE COPY .....20 Cents
Published weekly. $7 a year to organizations and civilians; $5 a year to individual members of the Services.

Post-War Program

Naval Supply Depot

ONE of the most important links in the United States Navy Supply System is the Naval Supply Depot, Mechanicsburg, Pa., strategically located in the heart of the Cumberland Valley, within eight miles of the city of Harrisburg, the capital of the "Keystone" state. Rear Adm. Charles W. Fox (SC), USN, is the Supply Officer in Command of this depot, one of the largest naval supply activities in the world.

Rear Adm. Fox

An 841 - acre tract of farm land, on the outskirts of the town of Mechanicsburg, was transformed into the Naval Supply Depot which was formally established on 1 Oct. 1942. Approximately 156 airline miles inland, this depot is ideally situated close to direct rail connections to all naval repair and shipping bases on the East Coast. Excellent highways facilitate overnight trucking service to many East Coast points.

More than 100 buildings, dotting this large tract of land, provide eight and one-half million square feet of storage area within the Naval Supply Depot, are easily accessible to many types of transportation through the 30½ miles of paved roads and the 44½ miles of rail track crisscrossing the entire area.

Mechanicsburg's part in rendering service to the United States Fleet embraces many varied activities, and is administered jointly through the Naval Supply Depot proper and the Ships Parts Control Center, under the overall command of Admiral Fox. Capt. Stephen R. Edson (SC), USN, the Deputy Supply Officer in Command, also serves as Officer in Charge of the Naval Supply Depot proper. Capt. Ralph K. James, USN, is Oficer in Charge of the Ships Parts Control Center.

The Naval Supply Depot proper administers the operating functions of all activities, exclusive of the Ships Parts Control Center, and is responsible for all storage of materials, including Bureau of Ships repair parts controlled by the Ships Parts Control Center, and material controlled by the Bureau of Aeronautics, Bureau of Ordnance, Bureau of Medicine and Surgery, Bureau of Supplies and Accounts, Bureau of Personnel and the Bureau of Ships. Material in stock as of 1 Sept. 1946 is valued at $571,485,785.00. In connection with storage facilities, extensive programs have been developed including: (1) an electronics shop for the repair of electronic equipment, modification of electronic equipment to conform with specification changes, and the salvage of useable parts from condemned electronic equipment; (2) a repair and reconditioning unit for aircraft instruments and training devices, established by the Office of Research and Inventions,

(*Please turn to Page* 393)

Yuletide Greetings to the Armed Forces

The Army and Navy Journal extends its best wishes for a very Merry Christmas to all Service personnel and its hope for a New Year of peace preserved and protected by strong United States Forces. We are pleased to transmit to the Services the following greetings:

President Truman, Commander in Chief—"I am very grateful for this opportunity to extend to each one of you, wherever you may be, my most sincere Christmas greetings.

"We are now involved in a great struggle, a struggle to shape the events of today and tomorrow toward a just and enduring peace for all peoples in all countries. There is still much to be done.

"The accomplishment of our task will require the same devotion and the same high ideals which you, the men and women of our Armed Forces, have always displayed.

"The liberty-loving peoples throughout the world, who in darker days prayed for our success in battle, now offer their prayers that our struggle for harmony and tranquility on earth shall succeed.

"I wish to express the Nation's deep appreciation of the part that you are playing, and the hope that our gratitude will in some small way compensate for your absence from home, friends, and dear ones on this Christmas Day.

"Again, may I wish you a very Merry Christmas!"

Secretary of War Robert P. Patterson—"At this Christmas season, I wish to extend my heartiest greetings and best wishes to the men and women in our Army, military and civilian, and to express my warm appreciation for your loyal and efficient services throughout the year.

"It has been a hard year, and you have acquitted yourself with honor. You have exhibited the soldierly qualities of courage, intelligence and perseverance which stood you so well in battle and won you the affection and admiration of the American people. Your work at home and abroad continues in the finest traditions of the service."

(*Please turn to Page* 371)

New Marine Corps Generals

Selection of seven Marine Corps Colonels for temporary promotion to Brigadier General has been approved by President Truman. Their advancement will still leave the Marine Corps below its peace-time allowance of 51 Generals.

The selection boards, which were headed by Lt. Gen. Roy S. Geiger, were directed to consider all general service officers down to and including 55,209, all aviation officers down to and including 55,222, and all Supply Department officers down to and including 55,218, all Signal Numbers from the Navy Register 1945.

The promotion of the seven officers selected will create a total of 45 General officers in the Marine Corps, including one General, two Lieutenant Generals, 10 Major Generals, and 32 Brigadier Generals.

Selected for temporary promotion to Brigadier General, with their Signal Numbers and present duty stations, are the following:

Henry D. Linscott, 55,102, Fleet Marine Force, Pacific.

Merritt B. Curtis, 55,103, Disbursing Branch, Marine Corps Headquarters.

Dudley S. Brown, 55,119, Staff, National War College, Washington, D. C.

Robert H. Pepper, 55,120, Personnel Dept., Marine Corps Headquarters.

Fred S. Robillard, 55,127, Office of Quartermaster General, Marine Corps Headquarters.

Edward A. Craig, 55,130, an aviator, Training Command, Amphibious Forces, Pacific.

Vernon E. Megee, 55,211, Staff, National War College, Washington, D. C.

New Division Organization

Infantry and Armored divisions of increased size and firepower were announced 21 Dec. by General Jacob L. Devers, commanding general of the Army Ground Forces, following approval of new tables of organization by General of the Army Dwight D. Eisenhower, Chief of Staff.

The war strength Infantry division will number between 17,000 and 18,000 and the Armored division approximately 15,000. For the present, the strength of divisions in the United States will be held to approximately 14,000 officers and men, but for experimental purposes Army Ground Forces has been authorized to make variations in this figure.

The strength of the Infantry division has been increased one-fifth, but the number of its artillery weapons has been tripled and firepower more than tripled.

"Shock effect, striking power, flexibility and maneuverability are all increased," General Devers said.

"The Infantry division of the future," he said, "will not be merely amphibious, striking at the enemy by land or sea. It will be 'triphibious,' capable of swift mechanized movement by land, sea and air."

The Armored division will have less light but substantially more medium tanks.

Armored cars have been replaced by the M-24 light tank for reconnaissance use. Tank destroyers also have been eliminated, it having been found that additional tanks serve this purpose to better effect.

"The Armored division," General

(*Please turn to Page* 395)

Army Plans Post-War Program for Security

President Truman this week opened his campaign for the enactment of the administration's program for National Security with the appointment of an Advisory Commission on Universal Military Training.

This Commission, composed of nine civilians, is charged with:

"1. Studying the basic need as well as various plans for universal military training in relation to over-all planning for the National Security.

"2. Submitting recommendations to the President."

Other planks in the over-all security program will be:

Unification of the Armed Forces in a single Department of Common Defense.

International Military Cooperation including inter-American defense, military aid to China, and military missions to foreign countries.

A possible extension of Selective Service if it is found that voluntary recruiting will not keep the Services up to required strength.

In addition, of course, there is the possible international security requirements which may come out of the United Nations conference.

Under this over-all program the War Department is planning a comprehensive rewriting of the National Defense Act and the basic laws upon which the Regular Army and its civilian components are organized and operate. This War Department program, which will be submitted to Congress in a few large bills rather than in the numerous piece-meal bills which went to the last Congress, will cover the following broad subjects:

1. Organization of the Army, the Air Forces (until such time as it may be separated from the Army), National Guard, Organized Reserves, and a common overhead and services.
2. Personnel.
   a. Strength.
   b. Promotion, retirement, and elimination.
   c. Pay and allowances.
   d. Procurement of personnel.
3. Military justice, including a revision of the Articles of War and the Manual for Courts Martial.
4. Research and Development.
5. Permanent supply and services.
   a. Procurement.
   b. Permanent construction.
   c. Maintenance and other services.
   d. Disposal of property.
6. Current operations.

The Army plans envision an eventual Regular Army of 875,000 officers and enlisted men, including an Air Force of 400,000, a Ground Force of 300,000, and 175,000 troops in the common service forces. No increase will be sought in the present authorized strength of 50,000 officers for the Regular Establishment, it being planned to continually augment this number by the use of officers of the Reserve and National Guard on extended active duty.

The entire program is predicated on an estimated M-day requirement of a field force of 1,750,000 composed of 10 divi-

(*Please turn to Next Page*)

U. S. Daily Press Views

Arms Standardization

Washington *Post*—"It is only good sense to continue the standardization as a necessary measure of the common defense under the United Nations. In no way is arms standardization inconsistent with the aims of the United Nations. In fact, as the U. N. prepares to consider practical means of disarmament, standardization of military equipment is something in which all nations, including Russia, could well be asked to join."

Worcester *Telegram*—"During the war, when America was the chief source of military supplies, many of the major weapons used by British and American troops were standardized. Since then the military authorities of the two countries have been conferring together for the purpose of standardizing the equipment of both nations. This does not mean that they are planning for further joint military action. But of course it wouldn't make any sense if there were no possibility that their troops would ever be united in such action. We aren't proposing to standardize American and Russian weapons, because we don't anticipate a condition in which it could serve any useful purpose."

Washington *News*—"Standardization will save time, money and manpower if totalitarianism again threatens civilization, and the time to provide for it is now, not after another Pearl Harbor."

New Haven *Register* — "Standardization, without fear or favor, should be continued and advanced until the need for the military arms and equipment no longer exists."

New York *Times*—"There has been no secret military pact. There will be none. Such consultations as have taken place with Britain on the subject of a standardization of equipment are a natural and logical consequence of intensive wartime efforts in this same direction."

Washington *Star*—"The United States and Great Britain would be ignoring the lessons of the past if they were to continue their separate ways in the design and manufacture of equipment intended for mutual defense. And taking advantage of these lessons cannot be construed as a plot against the security of any other nation."

National Security Program

(*Continued from First Page*)

sions of the Regular Army, 27 divisions of the National Guard, and service troops from Category A of the Organized Reserves.

The immediate objective for 1 July 1947 is for an Army of 1,070,000 of which 132,000 would be commissioned officers, to be deployed as follows:

Europe—one division, two regimental combat teams, ten constabulary regiments, and 11 air groups.

Northeast command—Two air groups.

Caribbean — One regiment, two air groups.

Pacific—One and two-thirds divisions, 16 air groups.

Japan—Six divisions, six air groups.

United States—Four divisions, 31 air groups.

The War Department considers Universal Military Training a necessary part of the security program, for without it they feel that the National Guard and Organized Reserves, which are to play a greater part than heretofore, can not be brought up to strength. The huge pool of trained veterans discharged after the war are becoming unavailable for service at the rate of 1,500,000 to 2,000,000 a year, so that in five years that source will be dry.

For the Regular Army it is planned to abolish the 18 months' enlistments and to ask for a system of two, three, and five year enlistments. In addition it is planned to set up "career" plans for personnel, so that enlisted men would have the opportunity, if professionally and educationally qualified, to go from the upper enlisted grades to the commissioned grades, or lacking educational qualifications, to pass into a special career category in which they would no longer be required to reenlist but would be on a similar status with officers as to the privileges of resignation and retirement.

Protest Economy Cuts

Because of the assertion of the Surgeon General that service to patients in Army hospitals has been reduced as the result of cutbacks in War Department appropriations, Representative Carl Hinshaw has written General of the Army Eisenhower requesting a review of the War Department budget program in the light of hospital needs.

Representative Hinshaw's letter to the Chief of Staff followed an exchange of correspondence with the White House, in which the President stated that his order limiting War Department expenditures to $8 billion for the fiscal year 1947 left "apportionment of curtailments largely to the discretion of the War Department."

The Office of the Chief of Staff has notified Representative Hinshaw that his "recommendations are being studied, and you will be further advised of the War Department's position in this matter at the earliest possible date."

Representative Hinshaw told the ARMY AND NAVY JOURNAL that hospital funds are insufficient partly because the allowance paid by the Veterans' Administration for treatment of veterans in Army hospitals does not cover all incidental costs. At McCornack General Hospital in San Francisco, he said, the Quartermaster allowance is not adequate to clean uniforms of outgoing patients, a service required by law.

Merger of Committees

In response to the plea of Representative W. Sterling Cole for opposition to the merger of the House Military and Naval Affairs committees, ten Representatives have affirmed their general approval of the Congressional Reorganization Act without change.

Members of the House Naval Affairs committee wrote Mr. Cole that they would not oppose the merger of the two committees into a Committee on Armed Services when the 80th Congress convenes. Representative Cole, who as ranking Republican on the House Naval committee would head this group were it not merged with the Military Affairs committee, had written the membership of his committee asking support of his opposition to merger of committees.

In support of Representative Cole's personal stand in the matter, Representative F. Edward Hebert asserted the view expressed by Mr. Cole reflects the vote against merger of committees taken by the House Naval Affairs committee in executive session, and, therefore, cannot properly be interpreted as an attempt by Representative Cole "to protect his succession to the chairmanship of this more than hundred year old Committee."

In explanation of her disagreement, Representative Smith (R., Me.) wrote:

"I feel that there has not been any change in the vital aspects and conditions of national security to warrant a reversal of this provision in the Reorganization Law. A great majority of Congress voted for this measure and I feel we are honor-bound to follow through on the reorganization of Congress and at least give it a fair trial.

"I value your views and position and resent the charges of the press and individuals that your leadership in opposition to the merging of the Committees is prompted by personal desire for chairmanship of the Naval Affairs Committee."

Army Promotion Plans

Finishing touches are now being put on the War Department's draft of the promotion legislation it will submit to the 80th Congress.

The retirement and elimination recommendations will be a repetition of that submitted to the last Congress, with no changes.

In addition, in connection with the rewriting of the National Defense Act, the Department will seek authorizations for increases in the number of general officers authorized for the various branches such as the Medical Department, Corps of Engineers, Ordnance, etc.

It is understood that there will be a separate promotion list for the Air Forces, both because of different requirements for that arm and also in light of the projected separation of that service into an independent branch.

While no official word has been forthcoming as to the content of the Department's projected promotion bill it is understood that in recent weeks the amount of forced attrition involved has been considerably reduced below the five per cent figure suggested to the Military Committee last session by General of the Army Eisenhower. It was feared, it was said, that too drastic forced attrition may eliminate officers whose retention would be desired, that it might be too difficult to replace them, and that there might be too adverse an effect on service morale.

Nevertheless, there will be a modest degree of forced attrition both to eliminate undesirables and to keep promotion moving so as to bring officers into the grade of colonel at a younger age.

Federal Income Tax

The Revenue Act of 1945, approved 8 Nov. 1945 provided for exclusion from income tax *all* compensation received as a member of military or naval forces of United States since 31 December 1940 below the grade of commissioned warrant officer.

Income taxes which have been paid upon any service compensation mentioned above, may be made subject to claim for refund on Treasury Department Form 843. Unless extended by absence of the taxpayer from the United States, the last days for filing claims for refund are:

For Taxes Based Upon Compensation Received In:	Final Date for Filing Claim
Years 1941 & 1942	31 Dec. 1946
Year 1943	15 March 1947
Year 1944	15 March 1948
Year 1945	15 March 1949

As to compensation received as a commissioned officer, there is no change in exclusion. The first $1,500.00 of pay each year after 1 Jan. 1943 is excluded from taxable service income.

Navy Transfer Program

The Navy has increased the age limits in all ranks by three years for officers applying for transfer to the Regular Navy in the Medical, Dental, Hospital, and Medical Allied Science Corps, and officers applying for transfer as legal specialists.

New age limits are:

Date of Rank		(MC)	Law
Lt. Comdr.	9/ 8/39- 2/29/44	43	46
Lt. Comdr	3/ 1/44- 3/14/44	42	45
Lt. Comdr.	3/15/44-10/16/44	41	44
Lt. Comdr.	10/17/44- 7/19/45	40	43
Lt. Comdr.	7/20/45-10/ 1/45	39	42
Lieut.	9/ 8/39- 6/30/44	39	42
Lieut.	7/ 1/44-10/ 1/45	38	41
Lt. (jg)	9/ 8/39- 8/31/44	38	41
Lt. (jg)	9/ 1/44-10/ 1/45	37	40
Ensign	9/ 8/39- 6/ 6/44	*35	†40
Ensign	6/ 7/44- 6/ 5/45	*35	†39
Ensign	6/ 6/45-10/ 1/45	*35	†38

*Ages for Ensign apply only to Hospital Corps. Ages in this column otherwise apply to MC, DC, HC, and MAC.

†Dependent upon legislation to be presented to 80th Congress.

For officers in these categories, the requirement that an application must be submitted within six months from release to inactive duty or resignation is cancelled. Officers now eligible for transfer under the increased age limits will not lose precedence as a result of having been on inactive duty provided they apply for transfer prior to 1 March 1947.

Did You Read—

the following important service stories last week:

Main features of new Navy promotion plan?

War Department studies enlisted career plan?

Travel by private auto authorized for Naval personnel?

Army cuts oversea officer requirements?

Marine Corps asks recommendations for temporary warrant rank?

If not, you did not read the ARMY AND NAVY JOURNAL. You cannot obtain this data from any other source.

Navy Correspondence Courses

The Naval War College offers correspondence courses to commissioned officers of the Navy, Marine Corps, and Coast Guard which can be completed in a moderate space of time without interference with the officer's regular duties.

The courses offered are in "Strategy and Tactics," "International Law," and "Naval Intelligence." On completion of each course, the officer receives a diploma signed by the president of the Naval War College. Completion of the courses in "Strategy and Tactics" and "International Law" exempts the officer from promotion examinations in those subjects.

Requests for enrollment are submitted to the Naval War College, Newport, R. I., via the commanding officer. Marine Corps and Coast Guard Reserve Officers must have their applications for enrollment approved by their respective commandants.

Ensigns are ineligible for the "Strategy and Tactics" and "International Law" courses, except that Naval Reserve Ensigns may take "International Law." The "Naval Intelligence" course is not available to Naval Reserve officers except those classified S(I) and those in the category of air intelligence officers.

Navy-Wide Science Study

A series of Navy-wide inservice courses for scientists is being planned by the Office of Naval Research in cooperation with the Bureaus and laboratories concerned.

As the first of this series, consideration is being given to organizing a course to be offered by the Bureau of Ordnance to cover much of the material included in a textbook on jet propulsion prepared by the California Institute of Technology. Such a course would cover gas dynamics, principles of operation of rockets, including applications, and the performance of jet propulsion devices.

Naval personnel who consider it desirable to set up such a course or who would like to take it should write Dr. Keith C. Harder, Office of Naval Research, Code 241, by 24 Dec.

Interim ROTC Uniforms

The War Department has authorized new interim uniforms for students enrolled in Senior ROTC courses, Maj. Gen. Edward S. Bres, Executive for Reserve and ROTC affairs announced 19 Dec.

Limited to students enrolled in ROTC courses at college level, the authorization calls for Elementary Course (first and second year) students to receive "green" blouses and trousers. Advanced Course (third and fourth year) students will be authorized "green" blouses and "pink" trousers.

Heads USFET Exchange Service

Col. Albert C. Morgan, Inf., has been appointed European Theatre Chief of Army Exchange Service, according to Theatre Chief, Special Services, relieving Col. Thomas R. Phillips who has received another assignment.

Colonel Morgan comes to the Army Exchange Service with a background of six months' duty as Community Exchange Officer for Berlin. His combat service was as Commanding Officer of the 276th Inf. Regiment which first went into action in December, 1944, with the 70th Division in the battle of the Bulge. When his division was de-activated, he served for a short time with the 36th Inf. Division before going to Berlin District.

Unified Command System

The War and Navy Departments announced jointly 16 Dec. that President Truman had approved a "comprehensive system of unified military commands designed to place responsibility for the conduct of military operations of the land, naval and air forces in the several regions of military importance, each in the hands of one single commander," as recommended by the Joint Chiefs of Staff.

The agreement was reached after negotiations between Maj. Gen. Lauris Norstad and Vice Adm. Forrest Sherman, Army and Navy operations planners.

Affecting seven commands, the plan is not yet complete, no change being made in some cases and no commander as yet in one.

The command set-up as announced is as follows:

Far East Command, commanded by General of the Army Douglas MacArthur. This command now takes in Japan, Korea and the Philippines and operational command of forces in the Marianas, Bonins and Ryukyus.

Pacific Command, commanded by Admiral John H. Towers, will now include Army forces in Hawaii formerly under General MacArthur's command.

Alaskan Command, commanded by Maj. Gen. H. A. Craig, an Army Air Forces Officer. This command is largely air at the present time.

Northeast Command, for which no commander has been named. This includes bases and forces in the northeastern approaches to the United States.

Atlantic Fleet, commanded by Admiral Marc A. Mitscher. This remains an entirely Naval command.

Caribbean Command, no changes made. Lt. Gen. Willis D. Crittenberger is at present the senior officer in this area.

European Command, continues under the command of General Joseph T. McNarney.

In addition, a Strategic Air Command is established. This remains under the command of General George C. Kenney.

The Navy has ordered that the abbreviated titles for Commander in Chief, Pacific Fleet, and Commander in Chief Atlantic Fleet, be changed to CincPacFlt and CincLantFlt, respectively.

In each of the new commands the commander will have a joint Army-Navy-Air staff. All commands will be responsible to the Joint Chiefs of Staff.

Following is the text of the joint Army and Navy announcement of the command system:

"The Joint Chiefs of Staff have recommended and the President has approved a comprehensive system of unified military commands designed to place responsibility for the conduct of military operations of the land, naval and air forces in the several regions of military importance to the United States, each in the hands of one single commander. These commanders at present are:

"(1) Far East Command—Commanded by General Douglas MacArthur.

"(2) Pacific Command — Commanded by Admiral John H. Towers.

"(3) Alaskan Command—Commanded by Maj. Gen. H. A. Craig.

"(4) Northeast Command — Commander not yet named.

"(5) Atlantic Fleet — Commanded by Admiral Marc A. Mitscher.

"(6) Caribbean Command—No change for the present.

"(7) European Command—Commanded by General Joseph T. McNarney.

"There is also established a strategic Air Command comprised of strategic air forces not otherwise assigned. These forces are normally based in the United States. The commander of the Strategic Air Command is responsible to the Joint Chiefs of Staff as are the other principal commanders provided for.

"Each such commander will be responsible for the unified planning for defense and in case of emergency the conduct of operations. This agreement does not change the day to day administrative business of each service. Forces assigned to any one of the unified commands will normally be from two or more of the three Services, Army, Navy, and Army Air, each component commanded directly by an officer of that Service. Each officer exercising unified command will be assisted by a joint staff, comprised of officers from the component Services.

"The Far East Command consists of U. S. Forces in Japan, Korea, the Philippines, the Marianas, Bonins and Ryukyus. The civil and military government of Guam and the ex-Japanese Mandates are not changed. The Marianas will eventually revert to the Pacific Command, the present arrangement being designed to give support to General MacArthur in the military occupation of Japan and southern Korea. The Pacific Command and the Alaskan Command are approximately the same as the former Pacific Ocean Areas, except as noted above, and the Alaskan Department respectively. The Northeast Command will include U. S. bases and forces in the northeastern approaches to the United States. The Atlantic Fleet and the European Command are substantially as at present. The Caribbean Command will include the U. S. Forces in the islands of the Caribbean and in the present Panama Canal Department.

"Directives from the Joint Chief of Staff, placing the above general provisions in effect, together with the necessary details are in the process of being issued."

Christmas Greetings *(Continued from First Page)*

Secretary of the Navy James Forrestal—"To the readers of the Army and Navy Journal I send sincere best wishes for the Christmas season and offer my assurance that we of the United States Navy, stand firmly behind those ideals which will assure a future of many more peaceful Christmases to come."

General of the Army Dwight D. Eisenhower, Chief of Staff—"You, of the United States Army, are now engaged in a mission whose essence is the establishment and maintenance of conditions in which may prosper worldwide extension of the Christmas spirit. Wherever you are stationed and whatever your task may be, all of you are guardians of peace. You strive so that, at this and every Christmas to come, we may be able to celebrate the good tidings of this season, serenely secure from the sacrifice and terror of war. Though accomplishment means that you must perfect yourselves in the technical, disciplinary and mental processes of war, your basic purpose must always be its prevention rather than its waging.

"To all who serve or have served in our country's Army, I extend my warmest greetings and sincere good wishes. My thoughts are especially with those whose duty requires them to spend this Christmas away from home and loved ones. The present sacrifice you make is a real contribution to Christmas peace."

Fleet Admiral Chester W. Nimitz, Chief of Naval Operations—"In extending the season's greetings to all members of the Naval Service, as well as friends of the Navy everywhere, I wish it were possible to express personally to each of you my very best wishes for your continued happiness and success.

"Once again we may observe the anniversary of the birth of Christ in the knowledge that the nations of the world are at peace with one another. Let us pray that they remain at peace.

"We have learned that there can be no peace on earth unless there is also good will among men. There could be no more appropriate occasion than that which we celebrate at this time, to re-affirm our determination that tolerance and understanding be made the basis of all human relationship. In so doing, we shall face not only the new year, but all of the years to come, with the assurance that each shall be truly a happy and prosperous one.

"Merry Christmas, and God bless each of you."

General Alexander A. Vandegrift, Commandant of the Marine Corps—"At this Christmas season it is my pleasure as Commandant to extend heartiest Christmas greetings to all Marines throughout the world. To each of you I offer best wishes for a successful and happy New Year in the expectation that together we will add new luster to the achievements of our Corps."

Admiral James F. Farley, Commandant of the Coast Guard—"May the joys of the Christmas season and happiness throughout the New Year be shared by all officers, men and civilian employees of the Coast Guard and their families. The success with which you have accomplished your increased duties often under the most trying circumstances attests to the spirit of good will which has characterized your efforts throughout the year now ending. I sincerely regret that not all of you can be at home with your loved ones during the holiday season. To each of you my sincere wishes for a Merry Christmas and a happy New Year."

General Carl Spaatz, Commanding General of the Army Air Forces—"To every man and woman who serves or who has served in our Air Forces, I send greetings at this holiday season. We are members of a family which must work to preserve the security of the nation which we cherish. Those who are on active duty are directly engaged in the maintenance of our country's air power. Those who have returned to civilian life can give their support in a less direct but equally valued manner. To all of you I express my personal appreciation for your spirit of loyalty and devotion to duty and country, and for the good work you have done to insure the success of our mission: To Defend America with Air Power."

General Jacob L. Devers, Commanding General of the Army Ground Forces—"Another Christmas with the world at peace lies before us. Another New Year with its promises of further recovery from the recent devastations of war and new hope for understanding and security is approaching. For these things we can all be thankful, but in our prayers of thanksgiving let us not forget to include those members of the Armed Forces who are today making this peaceful Christmas possible.

"Our Forces are stationed throughout the world, our occupational troops are in middle Europe, in the Mediterranean, in Japan, and in the outposts of the Pacific defending the victory that was won at such a great cost to this nation. The job being done by these forces is essential to our present needs. Furthermore, the Army Ground Forces, including our Testing Units in Alaska, the Aleutians, and the Northern Regions of the United States, are engaged in the progressive development of new weapons, new material and new tactics; work that is necessary to assure the future peace of the world, so that every future Christmas will be one of rejoicing and merriment, one of peace on earth for all men.

"To all members of the Armed Forces throughout the world, and particularly to the Ground Soldier wherever he may be, I wish to extend from Army Ground Forces our best wishes for a very Merry Christmas and a prosperous New Year."

Maj. Gen. Luther D. Miller, Army Chief of Chaplains—"To each of you in the United States Army, wherever you may be and whatever your task, I send greetings from the Chaplain Corps. May the blessings of Christmas be with you and those you love. May the knowledge of God through Christ so quicken our hearts and minds that we may be blessed with a happy and a good New Year."

Marine Corps Foreign Duty

Enlisted men of the Marine Corps with less than two years to serve, who desire overseas duty, may select the area in which they want to serve, provided they extend their enlistment sufficiently to have a minimum of 28 months to serve.

Areas in which Marines are now serving on foreign duty stations, according to Marine Corps Headquarters, include China, Japan, Marianas (Guam and Saipan), Philippines, Hawaii, Alaska (Kodiak, Adak, Attu, Dutch Harbor), Balboa, C. Z., Caribbean (Roosevelt Roads, Guatanamo Bay, San Juan, Bermuda), and Newfoundland.

Army Officers to Staff College

The following Army officers have been selected to attend the 1 Feb. Course at the Armed Forces Staff College:

Infantry

Col. T. F. Bogart
Lt. Col. L. S. Bork
Lt. Col. F. Caraway
Col. C. H. Clarke, jr.
Col. L. R. Cochran
Lt. Col. J. B. Coolidge
Col. C. N. Hunter
Col. A. D. MacLean
Lt. Col. W. E. Maulsby, jr.
Col. S. E. Mays
Lt. Col. L. H. Smith
Col. T. R. Stoughton, jr.
Lt. Col. J. B. Sullivan
Lt. Col. P. O. Ward

Field Artillery

Lt. Col. J. A. Channon
Lt. Col. S. F. Crawford
Col. R. W. Goldsmith
Col. G. F. Lillard
Lt. Col. L. J. Schultheis
Col. H. V. Mitchell
Lt. Col. W. W. Sisson
Col. G. S. Speidel, jr.
Col. J. E. Theimer

Coast Artillery Corps

Col. W. A. Hampton
Lt. Col. L. J. Hillberg
Col. C. G. Patterson
Col. T. V. Stayton

Cavalry

Col. W. E. Finnegan
Col. D. W. Johnston, jr.
Col. W. H. Hunter

Air Corps

Col. J. Auton
Col. I. L. Branch
Col. E. B. Broadhurst
Col. R. O. Brownfield
Col. R. C. Sanders
Col. C. C. Bye, jr.
Col. O. G. Cellini
Col. W. F. Chapman
Col. W. H. Councill
Col. W. J. Cummings, jr.
Col. P. B. Foote
Col. C. J. Cochrane
Col. L. R. Hughes, jr.
Col. B. T. Kleine
Col. M. Malcolm
Col. H. Viccellio
Lt. Col. C. P. Baer
Lt. Col. M. R. Dowd
Lt. Col. H. C. Godman
Lt. Col. C. O. Moffett
Lt. Col. O. G. Quanrud
Col. C. D. Farr
Col. M. F. Slaght
Col. F. A. Kurtz
Col. M. D. Burnside
Col. K. R. Martin
Col. W. C. Mauldin
Col. C. M. McCorkle
Col. A. J. McVea
Col. G. C. Nye
Col. J. A. Pechuls
Col. G. E. Pinkston
Col. H. E. Rogner
Col. J. J. Roberts, jr.
Col. J. H. Rothrock
Col. A. L. Schroeder
Col. A. J. Shower
Col. F. C. Single
Col. E. H. Snavely
Col. R. R. Stewart
Col. A. W. Tyer
Col. H. Gregory
Col. H. L. Grills
Col. L. W. Marshall
Col. H. F. Muenter
Col. K. L. Riddle
Col. J. B. Stanley
Col. C. D. Wheeler
Lt. Col. R. K. Eason
Col. N. B. Harding

Ordnance Dept.

Col. J. Horridge
Col. P. S. Day

Quartermaster Corps

Col. D. I. Dodenhoff
Lt. Col. G. F. Conner
Lt. Col. J. H. Heil, jr.

Chemical Corps

Lt. Col. R. W. Muth

Judge Advocate General's Dept.

Col. J. E. Godwin

Adjutant General's Dept.

Lt. Col. G. R. Bryant

Finance Dept.

Col. F. G. Fraser

Medical Corps

Col. J. A. Bain

Transportation Corps

Col. R. B. Lincoln, jr.
Lt. Col. C. F. Tank

Signal Corps

Col. S. S. Cerwin
Col. J. C. Monohan

Corps of Military Police

Lt. Col. J. M. Emigh

Corps of Engineers

Brig. Gen. H. A. Byroade
Col. W. W. Lapsley
Col. C. T. Newton
Col. E. A. Brown, jr.
Lt. Col. P. C. Hyzer

7th Inf. Div. Association

The Seventh Infantry Division Association has recently been formed and incorporated under the laws of California as a non-profit corporation. The National Chapter is located in San Francisco. It is planned to get branch chapters established and chartered in as many places as soon as possible.

To form a branch chapter ten bonafide ex-members of the Division must sign an application for charter. Application blanks have been prepared and will be mailed to interested groups upon request. Correspondence should be addressed to: The Seventh Infantry Division Association, c/o Col. L. J. Stewart, Presidio of San Francisco, Calif.

French Honor Gen. MacArthur

General of the Army Douglas MacArthur received France's highest decoration 14 Dec.—The Grand Cross of the Legion of Honor.

The presentation was made by Lt. Gen. Zinovi Y. Pechkov at the French mission in Tokyo. The only other Americans who have received the decoration are General of the Armies John J. Pershing and General of the Army Dwight D. Eisenhower.

Status of Promotion

Promotions and Vacancies on the Promotion List (Cumulative) and Promotions on the Non-Promotion List since 6 Dec. 1946

PROMOTION LIST

Last promotion to the grade of Colonel—Shuey E. Wolfe, CAC, No. 697 (in Col.); Vacancies—675; Senior Lt. Col.—Harry I. T. Creswell, Inf. No. 3.

Last promotion to the grade of Lt. Colonel—Ernest T. Owen, FA, No. 252.

Last promotion to the grade of Major—James A. Ronin, AC, No. 328.

Last promotion to the grade of Captain—John M. Reynolds, AC, No. 282.

Last promotion to the grade of 1st Lt.—Frank P. Breitenbach, CAC, No. 795.

New Regular Army Appointees (Promotion List Numbers not yet Assigned)

Capt. to Maj.

Gordon K. Smith, FD, (temp. lt. col.).
Alton A. Hill, QMC, (temp. capt.).

1st Lt. to Capt.

Vernon A. Shurm, CE (temp. lt. col.).
Clifford W. Howell, Inf., (temp. capt.).
John R. Smoak, Inf., (temp. lt. col.).
William E. Anglin, QMC.
John A. Goshorn, QMC, (temp. lt. col.).
William D. Duncan, Inf., (temp. lt. col.).
Richard W. Keyes, Inf., (temp. lt. col.).
Leland R. Dunham, Inf., (temp. capt.).
James O. Guthrie, OD, (temp. maj.).
Thomas H. Swan, Sig C, (temp. maj.).
Thomas B. Donoho, CE, (temp. lt. col.).

2nd Lt. to 1st Lt.

Albert J. Kuehn, Inf., (temp. 1st lt.).
Nelson A. Mahone, jr., FA, temp. 1st Lt.)
Jack I. Hamlin, QMC, (temp. capt.).
Hugh H. Armstrong, Sig C, (temp. 1st lt.).
Grady L. Hicks, jr., Inf., (temp. 1st lt.).

NON-PROMOTION LIST

Capt. to Maj.

William L. Spaulding, MC, (temp. col.).
Walter L. Deemer, jr., Ph. C, (temp. lt. col.).

1st Lt. to Capt.

Willis Monroe, Ph. C, (temp. maj.).

UNITED STATES ARMY

Gen. Drum Heads N. Y. Society

Lt. Gen. Hugh A. Drum, USA-Ret., Commander of the New York National Guard, was elected President of the New York Society Military and Naval Officers World Wars, at its twenty-sixth annual meeting held 3 Dec., at the Ritz-Carlton Hotel. He succeeds Maj. Gen. George Albert Wingate, Commander of the 52nd Field Artillery Brigade in World War I and former Surrogate of Queens County for many years.

His Excellency Francis Cardinal Spellman, Archbishop of the Diocese of New York was elected Chaplain. Other officers elected were: Vice Presidents: Maj. Gen. William Ottmann, organizer and Commander of the New York Guard from 1940 to 1944, and Capt. Leo W. Hesselman, USNR. Advocate: Brig. Gen. Arthur V. McDermott, former Director of Selective Service in New York City. Historian: Lt. Col. William L. Hallahan. Surgeon: Lt. Col. Martin deForest Smith. Treasurer: Capt. Clarence G. Michalis. Secretary: Lt. Col. Reginald A. Ward. Assistant Treasurer: Capt. John D. Butt. Assistant Secretary: Capt. George P. Montgomery.

General Wingate, who has served continuously as President for 23 years, was elected Honorary President.

Five newly elected members of the Standing Committee are: Brig. Gen. Carroll O. Bickelhaupt, Brig. Gen. J. William Kilbreth, USA-Ret., Brig. Gen. Charles E. Saltzman, Lt. Col. Colgate Hoyt, and Capt. Carl O. Kienbusch.

Speaker of the evening was Maj. Gen. Butler B. Miltonberger, USA, Chief of National Guard Bureau.

The Standing Committee of the New York Society, preceding the meeting, gave a formal dinner to: Lt. Gen. Robert Lee Bullard, USA-Ret.; Lt. Gen. William N. Haskell, former Commanding General of the 27th Division; Rear Adm. Reginald P. Belknap, USN-Ret.; Rear Adm. Francis E. M. Whiting, USN, Commandant U. S. Naval Base; Rear Adm. Edward H. Smith, USCG, Captain of the Port of New York, and former Governor, Charles S. Whitman, first President of the Society.

Shipment of Personal Effects

Existing regulations pertaining to oversea shipment of personal effects are consolidated and clarified in War Department Circular 357.

The circular explains regulations relating to oversea allowances, packing, crating, Government storage and shipping of personal baggage, household effects, privately owned automobiles, professional books and papers, and pets for members of the Army, their dependents, War Department civilian employees and their dependents, when traveling to or from oversea destinations under appropriate War Department movement orders.

Army Casualty Branch Reduced

Maj. Gen. Edward F. Witsell, The Adjutant General, announced 18 Dec. that the War Department's Casualty Branch, located in his office, has reverted to its peacetime status as a part of the Personnel Bureau.

Expanded from five employees to nearly 2,400 after the outbreak of war, the Casualty Branch had the responsibility of notifying parents and relatives of the death or injury to hundreds of thousands of America's fighting men.

Lt. Col. William D. Cartwright is in charge of the section which now numbers about 175 employees.

When you move, notify the Army and Navy Journal of your change of address so you will not miss any issues.

ARMY ORDERS

Secretary of War—Robert P. Patterson
Under Secretary of War—Kenneth Royall
Assistant Secretary of War—Howard C. Petersen
Assistant Secretary of War, Air—W. Stuart Symington
Chief of Staff—General of the Army Dwight D. Eisenhower

GENERAL OFFICERS

Maj. Gen. Harold N. Gilbert (Lt. Col., AGD) retired as Maj. Gen., p.d.

Brig. Gen. Karl S. Bradford (Col., Cav.) retired as Brig. Gen., p.d.

Brig. Gen. Roland F. Walsh (Col., QMC) retired as Brig. Gen., p.d.

INFANTRY

Col. D. Riley, Pasadena, Calif., to Sixth Army, Ft. MacArthur, Calif.

Col. W. N. Taylor, San Francisco, to 6601st ASU Calif. NG Instr Gp, Sacramento, Calif.

Col. A. W. Tyson, OC of S, to Office Dir of Opr and Tng, Wash., D. C.

Col. W. S. Wood, Wash., D. C., to 5202d ASU Office Sr Gr Instr, Chicago.

Lt. Col. J. B. Beckham, Ft. Dix, N. J., to 2d Div., Ft. Lewis, Wash.

Lt. Col. G. T. Beelman, Augusta, Ga., to 5209th ASU Office North Dakota NG, Bismarck.

Lt. Col. E. H. Hauschultz, Ft. Sheridan, Ill., to 5261st ASU Office Wisc. OR, Milwaukee.

Lt. Col. M. M. Huston, Wash., D. C., to Second Army, Balto., Md.

Lt. Col. W. E. Murphy, Ft. Bragg, N. C., to Seventh Army RTC, Ft. Bragg, N. C.

Lt. Col. C. S. Ware, Ft. Sam Houston, Tex., to John McNeese Jr. Col, Lake Charles, La.

Lt. Col. R. W. Duke, Ft. Bragg, N. C., to 4402d ASU La. NG Instr Det, New Orleans.

Lt. Col. F. N. Mallory, Cp Beale, Calif., to RTC, Ft. Ord, Calif.

Maj. C. M. Shelley, Ft. Dix, N. J., to Second Army, Balto.

Maj. B. R. Ulmer, Ft. Monroe, Va., to Hq V Corps, Ft. Bragg, N. C.

Maj. E. J. Alleo, Ft. Dix, N. J., to 2d Inf Div, Ft. Lewis, Wash.

Maj. H. L. Crook, Augusta, Ga., to RTC, Ft. Jackson, S. C.

Maj. L. C. Hollis, Ft. Dix, N. J., to 5257th ASU Office, Mo. OR, St. Louis, Mo.

Maj. J. L. Packman, Cp Campbell, to Inf Sch, Ft. Benning, Ga.

Maj. G. H. Temme, Governor Is., N. Y., to Columbia Mil. Acad, Columbia, Tenn.

Maj. W. D. Hodge, Augusta, Ga., to RTC, Ft. McClellan, Ala.

Maj. D. P. Gallagher, Ft. Dix, N. J., to Second Army, Balto., Md.

Maj. T. Alford, Cp Beale, Calif., to 5203d ASU Office Sr Gr Instr, Des Moines, Iowa.

Maj. A. Bernard, Ft. Dix, N. J., to 2d Army 3552 ASU, Ft. Hayes, Ohio.

Maj. C. H. Langdon, Ft. Meade, Md., to RTC, Ft. Jackson, S. C.

Maj. W. D. Macht, Syracuse, N. Y., to 1st Army Retg Det No. 1, Watertown, N. Y.

Maj. E. I. Roberts, Ft. Bragg, N. C., to Arty

(*Please turn to Page 377*)

Special Caterers to Military Services

HIRAM WALKER'S STRAIGHT 6 YEARS OLD BOURBON DELUXE

Monday and Tuesday, December 23rd and 24th, ONLY

$3.89 FIFTH 86 proof

In appreciation of the splendid cooperation of our many customers, we are offering this extraordinary fine Bourbon far below prevailing prices.

We take this opportunity to wish our many friends throughout the world a very Merry Christmas and a Happy New Year.

Phone ME. 5080

Ask the Military-Man About: HARRY'S LIQUOR STORE

EASY PARKING

FREE DELIVERY

A check of the Legend will show you how convenient we are to ALL important buildings. Why not visit us soon?

"IN THE HEART OF THE MALL CLOSE TO THEM ALL"

509 7th St. S.W. RETAIL—DIRECT IMPORTERS

IT'S WITT'S

ALL SEASON CAP WITH DETACHABLE COVER

FASHIONED BY Jerome W. Witt WASHINGTON

Army Officer's Cap, $7.90

- Light-weight comfort
- Head-conforming shapes
- Shade "33" OD wool serge
- Extra green elastique or suntan covers available.

JEROME W. WITT

1011 H ST. N.W.
425 12TH ST. N.W.
WASHINGTON, D.C.

U. S. ARMY BATTLE JACKETS

Smartly styled — Stock sizes

Jacket, Serge #33 or Dk. Elas ..	$39.50
Trousers, matching	17.50
Trousers, pink .....$18.50 to	22.50
Service cap, OD #33	11.50
O'Sea cap #33 $2.50; Dk. Elas ..	3.00

Fine Hand Embroidered

BULLION INSIGNIA

(Summer or Winter background)

O'Sea bars (small ETO size) ..ea.	$ .60
O'Sea chevrons WWI matching ea.	.75
Colonel eagles .....pr.	3.75
Lt. Col.; Major or Captain ..pr.	3.00
Lieutenants .....pr.	1.50
7th Army—8th, 9th, 20th AF ..ea.	5.00
Air Force, Transportation, Pilot, Combat Inf.; Parachutist ....ea.	4.00
Cav.; Engr.; FA.; Inf. .....pr.	3.00
CAC, Signal, Gen. Staff .....pr.	4.00
U.S. pr. $1.50; Unit Citation	1.50
Meritorious $2.00—Numeral 2	3.00
French & Belgium Fourrageres ..	1.75
Dutch lanyard	.85

Hand made campaign bars on buckrum to sew-on
Price list on request

CHRISTENSON
286 Fifth Ave., New York 1

BATTLE JACKETS
(fully lined)
Shade 33 Serge—100% Wool
Custom-tailored to measure.
Matching trousers if desired.
Measurement instructions and prices on request.
ROSENFIELD UNIFORM CO.
Est. 1902 15 School St. Boston 8, Mass.

They call us "O.G."

...not "M.D."

Consult Old Golds for Pleasure!

Looks as if some cigarette people are beginning to think they're in *medical* practice! Cures, treatments, throat care—aren't they forgetting that what you really smoke for is *pleasure?*

And *pleasure* is what you'll get from Old Golds! You see, Old Gold concentrates the most advanced scientific techniques on one objective: to give you the deep-down enjoyment of a fragrant, *flavorsome* cigarette!

If that's what *you're* after, if the pleasure of mellow, extra-quality tobaccos at their peak of flavor is what you want . . . smoke Old Golds! You'll *enjoy* 'em!

If you want a TREAT instead of a TREATMENT ...smoke O.Gs!

Made by *Lorillard,* a famous name in tobacco for nearly 200 years

Navy Athletic Program

A plan to revive sports on an All-Navy competition basis is being worked out in the Bureau of Naval Personnel, and initial All-Navy tournaments have been scheduled in basketball in March and in boxing in May of 1947.

When final plans are completed, invitations will be sent to various commands to send representatives to these tournaments. Individual participation in the Navy-sponsored athletic program will be voluntary.

The All-Navy tournaments are to be a part of the physical fitness program established last May by Secretary Forrestal, consisting of a formal physical fitness program at training activities, and physical maintenance and athletic programs at all other naval activities.

Outlining its program in BuPers C/L 276, the Navy declares:

"The fundamental objective of the Navy's Physical Fitness Program is to develop physical condition, emphasize discipline and obedience, develop individual qualification and skills in sports and swimming, maintain high state of morale, and provide guidance to every person in the Navy in maintaining the best possible physical fitness.

"In maintaining the Navy in a condition of readiness for war it is as important to devote on duty time to physical fitness maintenance of personnel as it is to devote time to training and to upkeep of material. A smart ship is manned by men who are kept efficient and mentally alert through physical fitness. Fostering a well-rounded athletic program serves to maintain physical fitness, and it is an important factor in morale building for participants and spectators alike.

"Participation in athletics must be voluntary in order that individuals taking part may realize the greatest benefits. A comprehensive intramural athletic program within a ship or shore establishment rather than the varsity type of athletics is the most practicable way to benefit the largest number of men. However, for a successful intramural program it is necessary that an incentive be furnished. Varsity athletics between highly skilled members of ships and/or shore establishments provide that incentive and should be considered as necessary for that reason alone. To encourage the highly skilled to engage in varsity competition, the recognition and prestige that goes to all champions should be provided to teams and individuals in the form of an All-Navy designation. Fleet Commands, Area Commanders, and Commandants should conduct championship play-offs in all sports."

U. S. NAVY & MARINE CORPS

Navy Unit Commendations

Navy Unit Commendations have been awarded the following Naval Units:

Cruiser Division Twelve, comprising the USS Cleveland, USS Columbia, USS Denver, and USS Montpelier, for outstanding heroism in action against enemy Japanese combatant ships off Empress Augusta Bay, the night of 1-2 Nov., and the hostile air attack of the morning of 2 Nov. 1943.

USS Birmingham for extremely meritorious service during salvage operations after the USS Princeton had been critically damaged by enemy Japanese action in the Battle off Samar, 24 Oct. 1944.

USS Honolulu for outstanding heroism in action against enemy Japanese forces during Battle of Tassafaronga, 30 Nov. 1942; the Battles of Kula Gulf and Kolombangara, 5 and 13 July 1943; and operations at Palau and Leyte, 12 Sept. to 20 Oct. 1944.

USS St. Louis for outstanding heroism in action against enemy Japanese forces during the Battles of Kula Gulf and Kolombangara, from 5 to 13 July 1943; the Philippine Islands Campaign, from 15-28 Nov. 1944; and the Okinawa Campaign, from 25 March to 28 May 1945.

USS Philadelphia for outstanding heroism in action in the Mediterranean Theatre from 9 July to 19 Sept. 1943.

USS Bryant for outstanding heroism in action against enemy Japanese forces in the Saipan-Tinian operations, 12 June to 2 Aug. 1944.

USS Anthony for outstanding heroism as a Fire Support Vessel and radar picket ship during the Okinawa campaign, from 1-19 April 1945, and 19-24 June 1945.

USS Irwin for extremely meritorious service during salvage operations after the USS Princeton had been critically damaged by enemy Japanese action in the Battle of Samar, 24 Oct. 1944.

Adm. Foster Advanced

Rear Adm. Paul F. Foster, USNR, (USNA '11), winner of the Congressional Medal of Honor, Navy Cross, and DSM, was retired 1 Dec. and advanced on the retired list to the grade of Vice Admiral.

Selected for Colonel, USMC

The report of the selection board headed by Maj. Gen. Pedro del Valle has been approved by President Truman, permitting the temporary promotion of 27 Marine Corps officers to the rank of Colonel.

Those selected and their present duty station are:

Ralph B. DeWitt, Depot of Supplies, Philadelphia.

Shelton C. Zern, Marine Corps Base, San Diego.

Edwin C. Ferguson, Marine Barracks, Parris Island.

James M. Ranck, jr., 1st Marine Div., China.

Benjamin F. Kaiser, jr., Dept. of Pacific.

Miles S. Newton, Marine Corps Headquarters.

John B. Hill, 1st Base Headquarters Battalion.

William F. Parks, Marine Training and Replacement Command, San Diego.

Clarence J. O'Donnell, Marine Barracks, McAllister, Okla.

William P. Battell, Depot of Supplies, San Francisco.

Edson L. Lyman, Marine Barracks, Parris Island.

George H. Cloud, Marine Barracks, Parris Island.

Charles E. Shepard, jr., 1st Marine Div.

Peter A. McDonald, Central Recruiting Div,. Chicago.

Thomas B. Hughes, 1st Marine Div.

William B. McKean, Northwestern Univ.

Fred D. Beans, Marine Corps Headquarters.

Wallace M. Greene, jr., Troop Training Unit, Training Command, Amphibious Forces, Atlantic.

Frank M. Reinecke, Marine Corps Schools, Quantico.

John M. Davis, Marine Corps Headquarters.

Walfried H. Fromhold, Marine Corps Headquarters.

James T. Wilbur, Naval Aviation Training Base, Corpus Christi.

Donald M. Weller, Marine Corps Schools, Quantico.

Edgar O. Price, 3d Reserve Dist., New York City.

Robert E. Hill, Marine Corps Schools, Quantico.

Russell Lloyd, Service Command, Fleet Marine Force, Pacific.

Ernest W. Fry, jr., Marine Corps Schools, Quantico.

History of Naval Operations

The "History of United States Naval Operations in World War II" is being written by Dr. Samuel Eliot Morison of the Department of American History of Harvard University. Dr. Morison was recently placed on inactive duty after serving as a captain in the Naval Reserve.

Commo. Dudley W. Knox, USN-Ret., has written an introduction. First volume is scheduled for publication in July, 1947, covering "The Battle of the Atlantic, 1939-1943."

Recall of Reserve Medics

The Bureau of Medicine and Surgery has been authorized to recall to active duty, on a voluntary basis, Naval Reserve medical and dental officers now on inactive duty pending final action on applications for transfer to the Medical Corps of the Navy.

NAVY ORDERS

Secretary of the Navy—James Forrestal

Under Secretary of the Navy—John L. Sullivan

Assistant Secretary of the Navy—W. John Kenney

Assistant Secretary of the Navy for Air—John N. Brown

Chief of Naval Operations—Fleet Admiral Chester W. Nimitz

11 Dec. 1946

Rear Admiral

Thomas R. Cooley, ComBatDiv-4, to NavBase, Newport, R. I.

Captains

Mark W. Clay, Guam, to Staff SO, ServRon-3.

Clifford T. Corrin, Com-8, to Com-5.

George A. Holderness, CO, Leyte Ship Repair facilities, Manicani Island, P. I., to nearest NavDist.

William H. Mays, USNH, Bethesda, Md., to proceed home; relieved active duty.

Herbert L. Pugh, (MC), MO-in-C, MedSch, NNMC, Bethesda, Md., to Deputy Chief of BuMed.

Gordan W. Rule, S(E), BuShips, to ResSta, Wash., D. C., for sep.

Myron W. Willard (SC), NTC, Great Lakes, to O-in-C, DO, Com-12.

Frederick P. Williams, LantFlt, to Asst C of S for Opr.

Commanders

Donald G. Baer, CO, USS Remora, SS 487, to CO, USS Sea Cat, SS 399.

Sumner M. Beal, (DC), Boston Naval Shipyard, to USS Antietam, CV 36.

Russell D. Bell, home; to exam by Retiring Bd and orders home.

George M. Chaffin, Mare Island Naval Shipyard, to Asst Communications and Electronics Officer, Staff, Marianas.

Roland H. Dale, Navop, to Naval Air Facility, Honolulu, T. H.

Nathan H. Edson, (S), Navop, to RecSta Wash., D. C., for sep.

Edward H. Feldmann, (CEC), Com-8, to Public Works officer, NavSta, Orange, Tex.

Harry Frey, (MC), USNH, Portsmouth, Va., to proceed home; relieved active duty.

Harry R. Godrey, (SC), Staff, 7th Fleet, to proceed home. relieved active duty.

John P. Grogan, (CEC), Com-7, to Public Works Office, Com-5.

Hart D. Hilton, Pensacola, Fla., to CO, UtRon-7.

Walter J. Macy, (S), Tucson, Ariz., to Intelligence Officer, Staff, Marianas.

Alden C. Packard, Naval Research Lab, to BuAer.

Jerome F. Smith, (MC), USNH, NTC, Bainbridge, Md., to USNH, Philadelphia.

Owen A. Smyth, (S), USNH, Chelsea, Mass., to exam by Retiring Bd and orders home.

Lieutenant Commanders

James L. Abbott, jr., AirLant, to CO, VF-4B.

Margaret L. Acherson, (NC), USNH, St. Albans, N. Y., to USNH, Alea Heights, T. H.

Wilma Caroline Clayton, (NC), USNH, St. Albans, N. Y., to USNH, Alea Heights, T. H.

George D. Hilding, (Ret.), USNA, Annapolis, to proceed home; relieved active duty.

Donald M. Jeffrey, (CEC), NAS, Arcata, Calif., to CB Cen, NavSta.

Clement T. Latimer, MinePac, to USNA, Annapolis.

John P. Lehan, Puget Sound Naval Shipyard, to BuShips, with Ships Salvage.

Elmer Maul, VA-3B, to be CO, VA-3B.

Wymard B. McQuown, USS Coasters Harbor, AG 74, to BuShips.

Robert S. Merritt, NATB, Corpus Christi, Texas, to Fleet Air West Coast.

Luther B. Nicholson, CO, CASU-44(f), to CO, FASS-118.

Robert J. Quinn, (S), Weser River, Germany, to NavForGermany.

Guy W. Rodey, (S), USNH, Long Beach, to exam by Retiring Bd and orders home.

(*Please turn to Page 377*)

SHIP REPAIRING • DRY DOCKING
CONVERSIONS • NEW CONSTRUCTION
ENGINE BUILDING
HULL AND MACHINERY REPAIR PARTS
are all Complete Services
offered by this one of this Country's
Largest and Complete
Shipbuilding and Ship Repairing Plants.

SUN SHIPBUILDING
AND DRYDOCK CO.
CHESTER, PA.

"ON NIGHTS LIKE THIS, I'M GLAD WE HAVE E. D. POWER!"

In fair weather and foul —especially in foul—you like to know that your auxiliary power equipment will *keep running*. Electro Dynamic motors and generators are famous for dependability.

ELECTRIC BOAT COMPANY
33 Pine Street, New York 5, N. Y.
Submarines
NEW LONDON SHIP AND ENGINE WORKS
Groton, Connecticut
Electric Motors
ELECTRO DYNAMIC WORKS
Bayonne, New Jersey
Motor Torpedo Boa
ELCO NAVAL DIVISION
Bayonne, New Jersey

The WETTER the lather the BETTER the shave. Lifebuoy Shaving Cream's lather STAYS MOIST...keeps your beard soft and wet the whole shave through. Get Lifebuoy for CLEANER, SMOOTHER shaves.

Try Lifebuoy's Stay-Moist Lather

A N
s
with
Coast
effort
ex-pe
forme
ical.

Det
which
cal cl
cases
Guard
to be
Office
Febru

Thi
expire
believ
to ma
tions.

Com
that t
vembe
combi
contri
sonnel
the ap

A b
dant
izing A
weath
idea is
constr
testing
proper
man th
protot
ditiona

Disc
drome
meetin
tee in
Dept.
tion.
Coast
operat
structe

The
no ins
likely
a sead
station
indicat
use of
econon

Coas
phies o
reau o
take in
Nation
take p
from c
ized pe

Mem
the Co
at Hea

The
ing Ch
Truma

"At
breathe
pray th
all peo

"Sinc

LO
Reg
rine
TIM
Rec
copy
End

TH
R
Mem

HO
N
F
THE

to
h,
of
a,
es,
C
to
ip-
ng
ip-
ics
cil-
Sta
to
Va.,
, to
blic
CO,
In-
, to
Sain-
lass.,
ne.
VF-
St.
T. H.
I. St.
T. H.
napo-
ty.
rcata,
SNA,
Ship-
Har-
hristi,
f), to
, Ger-
Beach,
ome.

STAYS
ER
BUOY
ving
am

U. S. COAST GUARD

AN all-out recruiting drive will be instituted on a nationwide basis 1 Jan. with an immediate objective of 1,000 Coast Guard enlistments a month. Every effort is to be made at that time to reach ex-petty officers with good records who formerly held ratings which are now critical.

Details have been carefully worked out which will expedite personnel and medical clearance from Headquarters in the cases of reenlistment of former Coast Guardsmen. All Auxiliary Directors are to be designated as District Recruiting Officers for the months of January and February.

This authorization will automatically expire on 1 March, at which time it is believed that personnel will be available to man recently authorized recruiting stations.

Commandant's Memorandum 2-46 states that the decline in recruiting during November and December is the result of a combination of circumstances, the major contributing factor being insufficient personnel assigned to recruiting duty, and the approach of the holiday season.

A board appointed by the Commandant to consider the feasibility of utilizing seadromes in lieu of ships as ocean weather stations has reported that the idea is sufficiently practical to justify the construction of one prototype for service-testing, and that the Coast Guard is the proper agency to carry out such tests and man the seadromes if experience with the prototype shows that construction of additional dromes is warranted.

Discussion of the possible use of seadromes for this purpose was held at the meeting of the Air Coordinating Committee in October, at which the Treasury Dept. was present for active participation. The ACC recommended that the Coast Guard was the proper agency to operate such a seadrome if one were constructed and service-tested.

The report of the board concluded that no insurmountable technical difficulty is likely to be encountered in constructing a seadrome suitable for use as a weather station, and that preliminary estimates indicate that over a period of years the use of seadromes would probably be more economical than conventional craft.

Coast Guardsmen possessing war trophies or other arms are directed by a Bureau of Internal Revenue public notice to take immediate steps to comply with the National Firearms Act and further to take precautions to prevent such arms from coming into possession of unauthorized persons.

Members of the advisory committee for the Coast Guard Academy met this week at Headquarters.

The Coast Guard received the following Christmas message from President Truman:

"At this joyful Christmas Season, which breathes the spirit of peace and goodwill, we pray that this spirit of amity will extend to all people.

"Since the Christmas Season is a time set apart for renewing those greetings and good wishes which exist in our hearts throughout the year, it is a happy privilege for me to extend to all in the United States Coast Guard, my sincere wishes for a Merry Christmas and a successful New Year. May your accomplishments in the future be as bright as your achievements in the past."

Christmas Clemency Granted

The War and Navy Departments announced 15 Dec. that 1,760 prisoners would be rewarded for good conduct with clemency, which will enable them to spend Christmas at their homes as free men.

First Carrier to be Scrapped

The USS Ranger, first vessel of the U. S. Navy constructed as an aircraft carrier and the only one of three pre-Pearl Harbor carriers to go through World War II without a hit by bomb, torpedo or shell, is to be sold for conversion or scrap.

The Ranger, named for the flagship of Commodore John Paul Jones and the sixth naval vessel so named, was commissioned 4 June 1934. She played a vital part in the war by ferrying U. S. Army fighters across the Atlantic and assisting in the amphibious operations during the North African campaign.

With the Enterprise and Saratoga, the Ranger was the only pre-war carrier to survive the entire war. War losses of pre-Pearl Harbor carriers included the old Langley, old Lexington, Yorktown, Wasp, and Hornet.

Graduate Medical Training

Residencies for graduate medical professional training in specialties of medicine and surgery are being established in various Army general hospitals on or about 1 Jan.

Tours of duty in residency status will be for one year, and at the following general hospitals: Brooke, Fitzsimons, Letterman, Madigan, Oliver, Percy Jones, Walter Reed, William Beaumont, and Army and Navy.

LOANS---

Regular officers — Army, Navy, Marine Corps, or Coast Guard. SAVE TIME — state purpose and amount. Recent appointees send true extract copy app't. order.

Endorsers not required. Bank rates.

THE MECHANICS BANK

RICHMOND, CALIFORNIA

Member Federal Deposit Insurance Corp.

HOBART ELECTRIC FOOD MACHINES

Mixers ● Slicers ● Peelers
Food Cutters ● Dishwashers

THE HOBART MFG. CO., TROY, OHIO

Airline Operators!

Check These Important Facts About the

MARTIN 2-0-2 CARGO PLANE

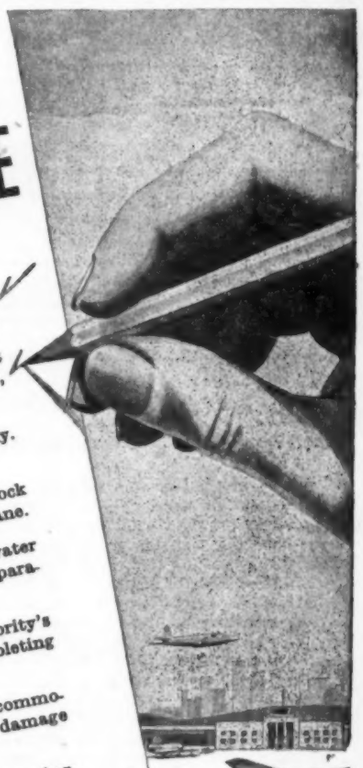

- Operation as low as 5½¢ per ton mile by A. T. A. formula.
- Design gross weight (maximum at take-off) 40,745 lbs. Design landing weight (maximum) 39,045 lbs. Manufacturer's weight, empty, 21,535 lbs.
- Main 6′ x 8′ cargo door and forward 5½′ x 3′ cargo door permit simultaneous loading of bulky and small cargo . . . permit pilots, maintenance men to enter cockpit while loading goes on aft.
- Pilot may regulate temperature of cockpit and cargo section separately. Cargo section is insulated, has automatic temperature control.
- Cruising speed, 280 m.p.h. at 15,000 ft. at 70% normal rated power. Block to block speeds are 25% to 50% faster than any comparable cargo plane.
- Take-off distance, over 50 ft. barrier, at sea level (2 engines with water injection) 2,550 ft. Can utilize any airport now used by existing comparable twin or four engined equipment.
- Designed and built in accordance with Civil Aeronautic Authority's new regulation C.A.R. .04 for scheduled transport aircraft, obsoleting designs based on C.A.R. .03.
- A wide variety of cargo fittings may be quickly installed to accommodate all types of cargo. Walls are protected by paneling to avoid damage when loading cargo.
- Waterproof floor, covered by quickly removable plywood flooring. Entire cargo area may be flushed down without risk of water damage to equipment below.
- Advanced features of larger 4-engined types, yet easily handled by 2-man crew.
- Simple garden hose attachment keeps outer skin of plane wet, interior cool, while loading in hot localities. Waterproof, rainproof fuselage.
- Elastic Mareng fuel tanks . . . bird-proof windshield . . . thermal anti-icing . . . under-wing pressure fueling . . . bomb-bay type maintenance hatches.
- Cargo compartment of 1909 cu. ft., with aisle, gives ample floor space in relation to cubic content. May be filled to maximum capacity of 15,100 lbs. without crushing low density cargo or stacking to inconvenient heights.
- Operational range, maximum (7300 lbs. of fuel) 1,790 mi.
- Rate of climb at sea level (take-off weight, normal power) 1,250 ft. per min. Operates with great efficiency at any altitude required to fly above mountainous terrain of west.
- With Martin 2-0-2 and 3-0-3 standard for airlines, cargo operators will obtain better service and maintenance . . . cheaper, more readily available, spare parts.

Martin AIRCRAFT

Builders of Dependable Aircraft Since 1909

THE GLENN L. MARTIN COMPANY, BALTIMORE 3, MD.

ARMY AND NAVY JOURNAL

Subscription rates—To individual members of the Services and their families: One year, $5.00; two years, $9.00; six months, $3.00. To civilians, and organizations: One year, $7.00; two years, $12.00; six months, $4.00.

Foreign postage $1 additional per year
Member of the Audit Bureau of Circulation

Advertising Consultant:
James O'Shaughnessy
17 East 42d St., New York City
Murray Hill 2-1422

Published Every Saturday by the
Army and Navy Journal, Inc.
1701 Connecticut Avenue Northwest
Washington 9, D. C.

JOHN CALLAN O'LAUGHLIN, *President and Publisher*
LEROY WHITMAN, *Editor*

Eastern Representatives:
Clark & Healey
205 East 42d St.
New York 17, N. Y.
Murray Hill 4-6317

Western Representative:
Hil F. Best
131 W. Lafayette St., Detroit 26, Mich.
RA 7298;
Rm. 1715, 360 N. Michigan Ave., Chicago 1
Rm. 310 Citizens Bldg., Cleveland, Ohio
Ch. 4050

"The Army and Navy Journal is established in the interests of no party; it will be controlled by no clique. Its independence will be absolute. Avoiding all personal and political bias, its influence will be directed solely to the inculcation of sound military ideas, and to the elevation of the public service in all its departments."—From Vol. 1, No. 1, of the Army and Navy Journal, published August 29, 1863.

SATURDAY, DECEMBER 21, 1946

"Today, we stand at a crossroads . . . the atomic bomb tests at Bikini were not lightly named."—GENERAL JACOB L. DEVERS.

OUR PRIORITY LIST

1. Maintenance in accordance with professional studies of our national needs and international commitments, of Regular Establishments organized and trained to utilize and employ materials of war developed by continuing Scientific research, and backed by Industry and Labor kept intimately familiar with the manufacture of such materials.
2. Reconstruction of National Guard and Reserve components federally aided and encouraged to maximum efficiency, and effectively coordinated with the Regular Services, and universal military training.
3. Increase in active and retired pay and allowances to meet risen costs so as to enable maintenance of American standards of living, and protection of such pay from reduction through income taxes.
4. Institution of orderly promotion systems in the Regular Establishments with recognition of war service and war ranks to prevent stagnation, and to insure the maintenance of high professional standards.
5. Continuance and expansion of service schools, including the Army and Navy Staff College, attendance of which shall be open to National Guard and Reserve officers.
6. Suitable rank and retirement benefits for former enlisted personnel and warrant officers who served as commissioned officers during the war.
7. Grant of the same rights and benefits to those who elect to remain in the Services as will be enjoyed by the discharged veterans.
8. Upward revision of pension scales to insure Service widows and dependents a living income.
9. Compensation for Service personnel who use privately owned automobiles on government business.
10. Maintenance of stock piles of strategic materials.

Merry Christmas and a Happy New Year

IN two weeks the 80th Congress will be in session. The new committees will be organized and soon ready for the consideration of Service legislation. Because of the pressure to bring the special war powers to an end every effort will be made to speed through the new legislation upon which the permanent post-war Armed Forces will be based. In addition Representative Martin has announced that he plans to get the appropriation bills out of the way by March and be ready to recess by 1 July. Among the legislation to be sought will be permanent systems of promotion for the Army and for the Navy and Marine Corps. From present indications it looks like these important measures, affecting vitally the future careers of every officer, will be rushed before the Committees and pressed for action before officers in the field, particularly those serving overseas, are given an opportunity to see what is in store for them or being able to analyze their effects and to make comments on them. This is particularly true as to the Navy, where the view is taken that it would be discourteous to Congress to make recommendations public before submitting them to the committees. That the committeemen themselves do not view it in this light is evidenced by the number of interviews with them, printed in the ARMY AND NAVY JOURNAL, showing that they would prefer to have the plans published prior to submission so that they will have the benefit of Service reaction and not be put in the position, as they have in the past, of enacting legislation which large numbers of officers feel is unjust to them. The Army does plan to make its proposals public as soon as all details have been worked out and the entire project finally approved by all high authority. Promotion, retirement, and elimination have such an important bearing on morale, and hence on efficiency, that it is of the utmost concern to the Nation that the Services have confidence in the fairness of whatever plans are finally enacted into law. This can not be so unless the personnel have a chance to study the proposals and comment on them and thus feel that their views and special problems were given consideration. We urge that the Army and Navy plans be made public now.

IN light of the key position which industry must henceforth hold in any effective system of National Security it is gratifying to see such progress as is now reported in the arrangements between Service aviation, as represented by the Army Air Forces and the Navy's Bureau of Aeronautics, and industry, as represented by the Aircraft Industries Association. Under this arrangement the Army and Navy air components will work with industry to set standards for all plane parts, a basic step in establishing a working sytem of industrial mobilization. The aircraft industry, with its practical experience in production, will review and comment on all new and revised aeronautical standards or specifications prior to their final issue. The Services will purchase production planning data from the industry. By these means the production in an emergency of air material such as fighters, light and heavy bombers, light and heavy transports, jets, and guided missiles, will be vastly simplified and speeded and also will be more economical. In other Service lines, too, there are plans for effective cooperation with industry in both its production and research phases. The Navy Supply Corps is already underway with the beginning of an interchange of personnel between industry and the service, known as "in-industry training," whereby industry becomes familiar with the requirements and problems of the service and the service learns the methods and capabilities of industry. This plan is being extended to other branches of the service. Meanwhile the Army and Navy Munitions Board is working on a program to keep industry prepared for a changeover in an emergency and to build up a stockpile of strategic materials. No industry, no matter how small, will be neglected in the plans the Board is making for industrial mobilization. National Security depends, as never before, upon industry, an asset which fortunately we possess above other nations. But unless the changeover from peace to war production and the necessary expansion can be made promptly it will avail us little. Fortunately leaders in both industry and the Services are keenly alive to the problem and are cooperating heartily. It remains for Congress to provide the funds to keep it going.

Service Humor

Military Transportation

An interesting "boner" in military orders came to light in 1937, when a member of the Fort Bliss garrison was ordered from Letterman General Hospital, in San Francisco, to Fort Bliss by way of "first available transport." Brig. Gen. Ben Lear, then Commanding General of the post wrote the following letter:

SUBJECT: Transport Service, San Francisco to Fort Bliss
TO: Commanding Officer, Letterman General Hospital, San Francisco, Calif.

1. A copy of your par 4, SO No. 210, has been received and noted with great interest and no little perturbation. A perusual of the transport sailings on file in this office fails to show any transport sailing scheduled from San Francisco to Fort Bliss. In the absence of this information, this headquarters assumed that the trip will be made up the Gulf of California and then either via the Colorado and Rio Grande rivers or the Gila and Rio Grande rivers (See Incl No 1—Map of suggested trip). Either route, it appears, would provide a most interesting adventure for both the crew and passengers. Of course, the difficulties of portage between the headwaters of the rivers and over Boulder and Elephant Butte Dams would provide situations to titilate the imaginaion of the engineers.

2. If possible, request that the transport be routed by way of Cloudcroft, New Mexico, where a shipment of pine slabs is waiting shipment to Fort Bliss for use in constructing a riding pen for the 7th Cavalry. If this can be arranged the saving of motor transportation for this item alone should be almost enough to make up for the transportation movement.

3. This headquarters wishes to cooperate fully in every way, in this respect these questions come to mind reference the trip:

a. The possibility of an international incident if the southern half of the Rio Grande is used.

b. The possibilities of arousing the natives and navies of the States of Arizona, Utah, Colorado, and New Mexico, respectively and progressively, in the event the interior is chosen.

c. The necessity for salutes.

d. The practicability of conducting problems for Coast Artillery Corps Reserve in the four states mentioned, and whether or not the trip by either route, should be publicized or kept secret.

4. There also arises the matter of repair to our local transport dock which has fallen into decay because of long disuse. Also might it not be a good plan to furnish portage from the Rio Grande to Fort Bliss? Due to the nature of the streams which must be navigated to reach Fort Bliss, it is assumed that the transport is smallish, possibly a flat bottomed affair as a mud scow.

5. Further information is requested as to the ultimate destination of the transport. Does it go on to Omaha, Nebraska, possibly or does it return to San Francisco? If the latter were the case, a great saving to the government could be effected as there will be many persons desiring accommodations for the return trip. Also, Lt. Col. Harry R. MacKellar, MC surgeon for the return trip, is eminently qualified for this detail having personally conducted many schooners over innumerable bars.

6. The exact date of arrival of the transport at this station would be appreciated, as the personnel of this command and the local townspeople are in a fiesta mood and plan a big reception.

7. This headquarters and the Ordnance Department appreciate deeply this unusually noble expenditure of effort to get Sgt. Nelson to us, and openly marvel at the ingenuity of the Medical Department in planning such a vastly radical departure from the humdrum routine of ordinary transport travel. Should further innovations in transport service be simmering in your executive offices, it is requested that we be notified promptly upon their adoption.

/s/s BEN LEAR
Brig. Gen. U. S. Army
Commanding

Ask The Journal

(This Department is maintained as a service for ARMY AND NAVY JOURNAL *subscribers. Please send return postage for direct reply.)*

J.P.F.—The War Department advises the ARMY AND NAVY JOURNAL that your flying pay would terminate on the day preceding your assignment to the separation center. You may not receive flying pay for any time assigned to the separation center, even though it is part of your former Base Unit.

A.F.H.—According to the War Department you would, if recalled to active duty from a retired status, be able to revert to your original retired grade, even though you might be reduced to a lower grade while on active duty.

A.L.L.—AR 615-160, July 1938 stated that only unmarried men might be accepted as aviation cadets, and that any cadet who married while in training would be subject to dismissal from the service. Marriage would not necessarily involve separation from the service, but it might be used as a reason for dismissing a soldier. This policy ended on 13 Dec. 1941.

R.L.K.—There is no law which authorizes a pension for veterans of World War I who are not disabled. Veterans having service-connected disabilities are entitled to pensions.

In The Journal

One Year Ago

Rear Adm. Jesse B. Oldendorf, USN, who is taking over command of the Eleventh Naval District, was honored Wednesday at a fete in the Pacific Coast Club, arranged by the Long Beach Chamber of Commerce Military Affairs Committee.

10 Years Ago

Col. Frank W. Weed and Mrs. Weed returned to West Point this week from Washington and Philadelphia where they were the guests of Col. Lewis W. Cass and Mrs. Cass and of Maj. John F. Corby and Mrs. Corby.

25 Years Ago

There is probably no case in military history of a question sufficiently acute to really justify two nations going to war having been decisively settled until the army of one had occupied an important part of the territory of the other, or at least shown its ability to do so.

50 Years Ago

The report of the year's naval progress, just issued by the Office of Naval Intelligence of the Navy Department, shows that the activity in Spanish Navy Yards in anticipation of a prolonged contest in Cuba continues. Work is being pressed at all centers of naval construction to the extent of the abilities of the workmen.

80 Years Ago

The present condition of the territory of New Mexico, surrounded as it is by hostile tribes of Indians, whose constant incursions and depredations are the source of the greatest evil which afflicts our country, demands that our people should be prepared to protect their own lives and property as the military force in this Territory appears inadequate, and the military inefficient, and not in a condition to perform this work promptly.

Army Orders

(*Continued from page* 372)

Sch, Ft. Sill, Okla.
Capt. G. W. Hessberger, Ft. Dix, N. J., to Second Army, Balto., Md.
Capt. R. K. Barber, Ft. Dix, N. J., to 5201st ASU Office, Colo. NG, Denver.
Capt. J. D. Neumann, NYPE, to Arty Sch, Ft. Sill, Okla.
Capt. H. R. Jones, Ft. Dix, N. J., to A-N Petroleum Bd, Wash., D. C.
Capt. J. E. Schroeder, Cp Campbell, Ky., to 82d Abn Div, Ft. Bragg, N. C.
Capt. E. E. Buckley, Augusta, Ga., to RTC, Ft. Jackson, S. C.
Capt. W. G. Raysor, Ft. Dix, N. J., to RTC, Ft. Ord, Calif.
Capt. R. Francis, NOPE, to 1242d ASU Office, N. Y. OR, New York, N. Y.
Capt. J. B. Cress, Ft. Dix, N. J., to CIG, Wash., D. C.
Capt. L. Jones, Ft. Dix, N. J., to Second Army, Balto., Md.
Capt. R. L. Sikler, Ft. Dix, N. J., to Second Army, Balto., Md.
Capt. W. W. Clappe, Cp Campbell, Ky., to Second Army, Balto., Md.
Capt. J. B. Farnsworth, Cp Hood, Tex., to to Arty Sch, Ft. Sill, Okla.
Capt. C. S. Bartholdi, Ft. Benning, Ga., to to 2d Inf Div, Ft. Lewis, Wash.
Capt. T. E. Robbins, Wash., D. C., to RTC, Ft. Dix, N. J.
Capt. A. W. Perrington, Cp Beale, Calif., to RTC, Ft. Dix, N. J.
Capt. H. E. Zimon, Cp Beale, Calif., to RTC, Ft. Dix, N. J.
Capt. W. C. Boehm, Cp Polk, La., to RTC, Ft. Ord, Calif.
Capt. R. M. Flynn, Cp Campbell, Ky., to Hq 2d Army, Balto., Md.
Capt. T. K. Jackson, Ft. Sill, Okla., to RTC, Ft. Dix, N. J.
Capt. C. B. Jones, Ft. Benning, Ga., to 555th Prcht Inf Bn, Ft. Bragg, N. C.
1st Lt. W. W. Sanders, Chicago, to RTC, Ft. Lewis, Wash.
1st Lt. P. M. Nance, Ft. Dix, N. J., to RTC, Ft. Jackson, S. C.
1st Lt. O. P. Merrett, Ft. Dix, N. J., to RTC, Ft. Ord, Calif.
1st Lt. J. M. Hamed, Cp Campbell, Ky., to RTC, Ft. Knox, Ky.
1st Lt. W. S. Voe, Ft. Dix, N. J., to RTC, Ft. Jackson, S. C.
1st Lt. J. A. Whitcanack, Oakland, Calif., to Presidio of San Francisco.
1st Lt. J. A. Frederick, Ft. Dix, N. J., to RTC, Ft. Ord, Calif.
1st Lt. W. A. Meyer, Ft. Dix, N. J., to 82d Abn Div, Ft. Bragg, N. C.
1st Lt. S. Goldstein, Philadelphia, to US Army Rctg Sv, Chester, Pa.
1st Lt. L. R. Rubbelke, Ft. Dix, N. J., to RTC, Ft. Lewis, Wash.
1st Lt. S. J. Kochy, Ft. Dix, N. J., to RTC, Ft. Jackson, S. C.
1st Lt. B. G. Lewis, Ft. Sam Houston, Tex., to RTC, Ft. Dix, N. J.
1st Lt. E. C. Ireland, Ft. Dix, N. J., to RTC, Ft. Jackson, S. C.
1st Lt. R. W. Durkee, Ft. Dix, N. J., to RTC, Ft. Jackson, S. C.
1st Lt. J. L. Schaughnessy, Ft. Dix, N. J., to RTC, Ft. Ord, Calif.
1st Lt. A. E. Hughes, Ft. Dix, N. J., to RTC, Ft. Jackson, S. C.
1st Lt. H. O. Shaw, Ft. Dix, N. J., to RTC, Ft. Jackson, S. C.
1st Lt. G. S. Hoar, NOPE, to First Army, Whitehall, N. Y.
1st Lt. J. F. Russell, Ft. Dix, N. J., to RTC, Ft. Jackson, S. C.
1st Lt. J. L. Crone, Ft. Dix, N. J., to RTC, Ft. Jackson, S. C.
1st Lt. W. R. Ladd, Balto., Md., to First Army, New York, N. Y.
1st Lt. N. B. Wolfe, Staten Island, N. Y., to RTC, Ft. Dix, N. J.
1st Lt. H. R. Black, Ft. Sill, Okla., to RTC, Ft. Dix, N. J.
1st Lt. S. L. Coleman, Ft. Dix, N. J., to 25th RTC, Ft. Benning, Ga.
1st Lt. W. C. Pelham, San Francisco, to RTC, Ft. Lewis, Wash.
1st Lt. G. M. Pobletts, Ft. Bragg, N. C., to Arty Sch, Ft. Sill, Okla.
1st Lt. R. B. Rankin, Cp Beale, Calif., to Hq 5th Army, Chicago, Ill.
1st Lt. A. F. Vernarelli, Ft. Sill, Okla., to RTC, Ft. Dix, N. J.
1st Lt. F. J. Szymkowicz, Ft. Benning, Ga., to Arty Sch, Ft. Sill, Okla.
1st Lt. H. Stein, Ft. Sill, Okla., to RTC, Ft. Dix, N. J.
1st Lt. M. K. Rhine, Tacoma, Wash., to RTC, Ft. Lewis, Wash.
From Inf Sch, Ft. Benning, Ga., to Ord Dept, Ord Sch, Aberdeen Pr Gr, Md.
2nd Lt. J. W. Blythe.
2nd Lt. J. C. Cantrell
2nd Lt. J. E. Justice
2nd Lt. W. M. Kuznecoff
2nd Lt. J. W. Maloney
2nd Lt. W. C. Marle
2nd Lt. R. B. Williams
From Ft. Dix, N. J., to RTC, Ft. Jackson, S. C.
2nd Lt. W. F. Breashears
2nd Lt. J. A. Crosscope
2nd Lt. H. T. Townsend
2nd Lt. S. E. Trotter
2nd Lt. W. R. Womlacher
2nd Lt. G. O. Atkinson, Ft. Bragg, N. C., to Abn Dept, Inf Sch, Ft. Benning, Ga.
2nd Lt. J. W. Snow, Ft. Sam Houston, Tex., to RTC, Ft. Jackson, S. C.
2nd Lt. V. R. Chadbourne, Tacoma, Wash., to RTC, Ft. Lewis, Wash.

CAVALRY

Col. F. W. Boye, Ft. Sam Houston, Tex., to Second Army, Baltimore, Md.
Col. T. J. Heavey, Washington, D. C., to Hq AGF, Ft. Monroe, Va.
Col. C. D. Keith, Washington, D. C., to Second Army, Baltimore, Md.
Maj. E. R. Garton, Cp Campbell, Ky., to 1273 ASU Office Sr NG Instr, Trenton, N. J.
Maj. A. W. McGrath, Cp Hood, Tex., to Oklahoma OR, McAlester, Okla.
Maj. W. Miller, Ft. Knox, Ky., to Arizona OR, Phoenix, Ariz.
Capt. A. G. Adams, Ft. Dix, N. J., to 2nd Inf Div, Ft. Lewis, Wash.
Capt. R. F. Briggs, Ft. Meade, Md., to Univ. of Arizona, Tucson, Ariz.
Capt. B. J. Lillie, Ft. Meade, Md., to Arty Sch, Ft. Sill, Okla.
Capt. R. A. Lusk, Washington, D. C., to SS System, Denver, Colo.
1st Lt. M. T. Giles, Ft. Sam Houston, Tex., to ORP Ground Gen Sch, Ft. Riley, Kans.
1st Lt. J. T. York, Ft. Sam Houston, Tex., to Ft. Monroe, Va.
2nd Lt. S. S. Haszard, Ft. Meade, Md., to Arty Sch, Ft. Sill, Okla.
2nd Lt. E. M. Karch, Ft. Custer, Mich., to RTC, Ft. Knox, Ky.

FIELD ARTILLERY

Col. R. H. Booth, Ft. Lewis, Wash., to AGO Casuals, Washington, D. C.
Col. L. C. Friedersdorf, Cp Hood, Tex., to 4310th ASU Office, OR, Austin, Tex.
Col. D. DeS. Trenholm, Ft. Lewis, Wash., to 1242d ASU Office, OR, New York, N. Y.
Col. G. D. Wahl, San Francisco, to 6705th ASU Oregon OR, Portland, Ore.
Lt. Col. T. M. Crawford, Ft. Dix, N. J., to Hq AGF, Ft. Monroe, Va.
Lt. Col. W. F. Fennell, Columbus, Ohio, to Second Army, Baltimore, Md.
Maj. F. O. Hamilton, Ft. Dix, N. J., to Oklahoma NG, Oklahoma City, Okla.
Maj. P. R. Conrad, Cp Hood, Tex., to Louisiana OR, New Orleans.
Maj. S. B. Magruder, Ft. Dix, N. J., to Seventh Army, Atlanta, Ga.
Maj. H. W. Caldwell, Ft. Dix, N. J., to Sch Trps Arty Sch, Ft. Sill, Okla.
Maj. A. E. Hunter, Cp Beale, Calif., to Seventh Army, Greensboro, N. C.
Maj. L. D. Crain, San Francisco, to RTC, Ft. Ord, Calif.
Maj. R. O. Van Horn, Salt Lake City, Utah, to Oakland Public High Schools, Calif.
Capt. W. S. Contole, Cp Hood, Tex., to Arty Sch, Ft. Sill, Okla.
Capt. J. T. Jones, El Paso, Tex., to 1st AAA Gm Bn, Ft. Bliss, Tex.
Capt. M. E. McDaniels, Ft. Dix, to Oklahoma NG, Ada, Okla.
Capt. E. B. Wood, Ft. Sill, Okla., to RTC, Ft. Bragg, N. C.
Capt. C. B. Reinschmidt, Augusta, Ga., to RTC, Ft. Jackson, S. C.
Capt. L. J. Sullivan, Chicago, to Illinois OR, Chicago, Ill.
Capt. E. Burr II, Ft. Dix, N. J., to 83d FA Bn, Ft. Benning, Ga.
Capt. I. W. York, Seattle, Wash., to Ft. Lewis, Wash.
Capt. A. M. McCord, jr., Ft. Dix, N. J., to 2d FA Bn, Ft. Sill, Okla.
Capt. B. P. Scully, Ft. Dix, N. J., to 6th Armd FA Bn, Ft. Sill, Okla.
Capt. J. D. Sugg, Cp Atterbury, Ind., to RTC, Ft. Knox, Ky.
1st Lt. D. Davis, Ft. Sill, Okla., to QM Sch, Cp Lee, Va.
1st Lt. F. Turk, Ft. Jackson, S. C., to Arty Sch, Ft. Sill, Okla.
1st Lt. M. A. Yarter, Ft. Sam Houston, Tex., to RTC, Ft. Knox, Ky.
1st Lt. T. G. McManmon, Ft. Dix, to First Army, Governors Is., N. Y.

COAST ARTILLERY CORPS

Col. P. W. Edwards, Ft. Winfield Scott, Calif., to Arty Sch, Ft. Sill, Okla.
Col. F. H. Hastings, Carlisle Bks, Pa., to Hq 2d Army, Baltimore, Md.
Lt. Col. F. D. Bendler, Ft. Bliss, Tex., to Arty Sch, Ft. Sill, Okla.
Lt. Col. J. R. Gifford, Ft. Dix, N. J., to Hq AGF, Ft. Monroe, Va.
Lt. Col. C. W. Hill, Ft. Winfield Scott, Calif., 1274th ASU Office Sr NG Instr, Wilmington, Del.
Lt. Col. W. H. Price, jr., Ft. Bliss, Tex., to Arty Sch, Ft. Sill, Okla.
Lt. Col. I. D. Roth, Augusta, Ga., to Arty Sch, Ft. Bliss, Tex.
Maj. M. E. Jensen, Ft. Bliss, Tex., to 4310th ASU Office Sr Instr OR, Austin, Tex.
Maj. J. J. Kelly, jr., Ft. Bliss, Tex., to Arty Sch, Ft. Sill, Okla.
Maj. J. J. Murphy, Ft. Dix, N. J., to Armd Sch, Ft. Knox, Ky.
Capt. P. H. Barton, Ft. Bliss, Tex., to Arty Sch, Ft. Bliss, Tex.
Capt. R. B. Buchanan, Cp Beale, Calif., to Arty Sch, Ft. Bliss, Tex.

(*Please turn to Page* 380)

OFFICIAL ORDERS

The Hon. Harry S. Truman, Commander in Chief of the Army and Navy
Chief of Staff—Fleet Admiral William D. Leahy, USN-Ret.
Military Aide—Maj. Gen. Harry H. Vaughn, AUS; Naval Aide—Rear Adm. James H. Foskett, USN

Navy Orders

(*Continued from Page* 374)

Ruth J. Sundberg, W(C), San Francisco, to Dist. Communications office, Com-12.
Francis M. Welch, CO, VF-4B, to staff. CNAT, NAS, Pensacola.
Daryle W. Wigle, Navop, to Supplementary Radio Station, Adak, Alaska.

12 Dec. 1946

Captains

Charles L. Austin, (SC), USNA, Annapolis, to SO-in-C, NSCS, NSD, Bayonne, N. J.
Henry S. Cone, (SC), Bayonne, N. J., to SO, NTC, Great Lakes.
Walter E. Doyle, (Ret.), Com-8, to proceed home; relieved active duty.
William Granat, BuOrd, to pres. of Special Bd on Naval Ordnance.
Albert Konigsberg, (SC), New York Naval Shipyard, to SO, USNA, Annapolis.
Henry L. Naff, (Ret.), BuPers, to proceed home; relieved active duty.
Watson T. Singer, Pearl Harbor, T. H., to be Admin. Officer, Pearl Harbor Naval Shipyard.
Claude L. Turner, S(E), BuShips, to Rec-Sta, Wash., D. C., for sep.
Otis Wildman, (Ret.), (MC), MedSch, NNMC, Bethesda, Md., to MO-in-C.

Commanders

Harold B. Atkinson, (S), BuPers, to ResSta, Wash., D. C., for sep.
Jasper R. Burke, (CEC), ServPac, to Marianas Command.
William M. Enright, (MC), USNH, Corpus Christi, to exam by Retiring Bd and orders home.
Harold J. Harris, (S), BuPers, to JAG's office.
Louis R. Hird, Naval Research Lab, to BuPers.
Edward F. Jackson, XO, USS Bayfield, APA 33, to Surface Operations Officer, Staff, Marianas.

Lieutenant Commanders

John L. Bishop, USNH, Memphis, to exam by Retiring Bd and orders home.
Fred P. Bowser, (SC), Bayonne, N. J., to Asst. to Dist. SO as Dist. Ship's Serv. office, Com-12.
Michael Elin, (A3), Asst. Naval Attache and Asst. Naval Attache for Air, American Embassy, Moscow, to Naval Attache and Naval Attache for Air, American Embassy, Warsaw, Poland.
Forest M. Gibson, (DC), Brooklyn, N. Y., to Staff, Philadelphia Group, 16th Fleet.
Monroe P. Hammond, jr., XO, USS Witek, DD 848, to Staff, Surface A/S Development Detachment, Atlantic.
Alfred Harbach, NAS, San Diego; relieved active duty; termination of appointment.
Willie B. Huebner, (D), USNH, Long Beach, to exam by Retiring Bd and orders home.
Howard W. Mabus, Com-12, to XO, USS Edisto, AG 89.
Irving F. Macey, (SC), NavForMed, to SO, USS Grand Canyon, AD 28.
Alfred B. Mackown, Key West, Fla., to XO, USS Witek, DD 848.
John W. Mason, jr., USS Salisbury Sound, AV 13, to Com-12.
Victor S. Mauldin, CO, USS Osberg, DE 538, to CO, USS Fogg, DE 57.
Francis V. Oleary, Navop, to Transportation Officer, USS General G.M. Randall, AP 115.
Robert G. Staelheber, CO, NAD, Vieques Sound, P.R., to BuOrd.
Henry Suerstedt, jr., NAS, New Orleans, La., to Pre-Flight Sch., NAS, Ottumwa, Iowa.
Henry L. Vaughan, USS Sea Owl, SS 405, to USNA, Annapolis.

13 Dec. 1946

Commodores

Harold Dodd, BuPers, to Navop.
Henry R. Oster, BuAer, to be Asst Chief for Material and Services.

Captains

George C. Crawford, CO, USS Chicago, CA

(*Please turn to Page* 379)

INSURANCE AT COST
Automobile
Household & Personal Effects
Personal Automobile Accident
UNITED SERVICES AUTOMOBILE ASSOCIATION
San Antonio, Texas

Luftenberg
MILITARY & CIVILIAN TAILORS
485 MADISON AVENUE, NEW YORK
OFFICERS' UNIFORMS—Hand Tailored to Order
INSIGNIA—Army-Navy-Marines—ACCESSORIES
The Finest CAP in the Army

MARINE CORPS

Commandant—General A. A. Vandegrift
Asst. Comandant—Maj. Gen. Lemuel C. Shepherd, jr.

Colonels

James P. Berkeley, Navy Dept., to Naval Adviser, Argentine Naval War College, Buenos Aires.
Samuel S. Ballentine, NGF, Wash., D. C., to FMF-Lant.
Harry E. Dunkelberger, 1st MarDiv, to USNH, Bethesda, Md.
Melvin G. Brown, Pearl Harbor, to MC Supply Depot, Oahu, T.H.
Francis B. Loomis, jr., office of CNO, to D of P.

Lieutenant Colonels

Edward F. Howatt, Quantico, to D of P.
Homer G. Hutchinson, jr., NA, MAG-31, to AirFMFPac.
Francis C. Claggett, Samar, to D of P.
Gordon A. Hardwick, San Francisco, to MD, NavDiscBks, NavBase, Terminal Island, San Pedro, Calif.
Ralph A. Collins, 7thCasOffDet, to 2dBn 5th Marines.
Melchior B. Trelfall, AVS, MarAirWest, home to be relieved from active duty.
William R. Collins, HQMC, to Inspector-Instructor, 11th Tank Bn, San Diego.
Willard C. Fiske, HQMC, to Inspector-Instructor, 13th Inf Bn, Los Angeles.
Richard W. Wallace, HQMC, to Inspector-Instructor, 2d 105mm Howitzer Bn, Los Angeles.
Francis X. Beamer, HQMC, to Inspector-Instructor, 6th Inf Bn, Philadelphia.
Lewis A. Jones, HQMC, to Inspector-Instructor, 1st 155mm Howitzer Bn, Philadelphia.
Robert E. McCook, 3dServBn, to MCStorage & Repair Depot, Barstow, Okla.
Frank P. Hager, jr., HQMC, to office of CNO.
Rathvon M. Tompkins, HQMC, to duty under instruction in Joint Services Staff College, Latimer House, Chesham Bucks, England.
Frederick L. Wieseman, FMFPac, to 1st MarDiv.

(*Please turn to Page* 380)

COAST GUARD

Commandant—Admiral Joseph F. Farley
Asst. Comdt.—Rear Adm. Merlin O'Neil

Commo. Louis L. Bennett designated Comdr. CG Dist-11, effective 31 May 1946.
Capt. Donald E. McKay designated Chief, Communications Div., Hq.
Capt. George C. Whittlesey, CG Yard, to CG Dist-3.
Comdr. Watson A. Burton, NavForPhil, to CG Dist-14.
Lt. Comdr. Lawrence W. Croteau; orders from Chelsea to USCGC Woodbine cancelled.
Lt. Comdr. Gordon E. Howell, Chicago, to MIO, CG Dist-17, and OCMI, Ketchikan.

Associated Means Style
IN NAVY UNIFORMS
Associated famous styling is the culmination of over a quarter of a century of specialization.
Specialization devoted *exclusively* to the production of distinguished uniforms and accessories for the officers of our armed forces.
Write today Dept. J

associated
MILITARY STORES INC.
19 W. JACKSON BLVD., CHICAGO 4, ILLINOIS

AAF Accident Rate Decreases

The Army Air Forces succeeded in lowering its number of major accidents to a post-war low during the last three months. The AAF classifies any accident in which a plane is damaged as a "major accident."

Records of the AAF's Flying Safety Division reveal the total of 79 major accidents in the United States during November was the lowest since December 1940, beginning of the pre-war expansion period. Previously, the rate had dropped to 105 accidents each in September and October.

With the decrease in aircraft accidents, fatal accidents also decreased to 10 in November, resulting in 13 fatalities. Four accidents in October resulted in 19 fatalities and 15 in September resulted in 38 fatalities.

Latest comparative figures reveal a decrease from 83 accidents involving aircraft damage per 100,000 hours' flying time during the demobilization period to 46 accidents per 100,000 hours of flying time in October.

AAF Test Lab. Building

An Army Air Force testing laboratory is being built at Wright Field, Ohio, that, when complete, will be able to reproduce the worst type of inclement weather encountered in any part of the world, Air Materiel Command officials disclosed 20 Dec.

When completed, the laboratory will be the country's most modern environmental testing facility. The Test Branch of the laboratory will provide equipment for testing aircraft accessories under the most severe climatic conditions. Work of installing the equipment began during the war and will not be completed until the end of 1947.

27th Fighter Gp. Reunion

The first annual reunion of the 27th Fighter Group will be held at Montgomery, Ala., the weekend of 18 Jan. 1947. All ex-officers of this Group who can attend are asked to notify Col. William R. Nevitt, Headquarters, Air University, Maxwell Field, Ala.

62 Patients to be Flown Home

Sixty-two Army hospital patients will be flown home for Christmas by Army Air Forces air evacuation planes of the Air Transport Command, Maj. Gen. Robert M. Webster, ATC Commanding General, has announced. The men will be accompanied by 40 attendants who are relinquishing their Christmas holidays so that the soldiers, all war casualties, can spend Christmas at their homes.

The 62 patients will be selected from Walter Reed General Hospital, Washington, D. C.; Letterman General Hospital, San Francisco, Calif.; and Percy Jones General Hospital at Battle Creek, Mich. All are either amputees or paralyzed because of spinal injuries. They will be flown to airfields near their homes in time for Christmas and will be flown back to their respective hospitals soon after New Year's.

Ground Control Approach

The Army Air Forces states that 20,000 successful landings were accomplished by AAF operated Ground Control Approach units as of January 1946.

At the present time the AAF still has four GCA units operating in Europe, three in the North Atlantic, three in Alaska, and 11 in the Pacific. Six bases in the United States are using GCA on 24 hour shifts. These are Andrews Field, Md.; Westover Field, Mass.; Clinton County Airport, Ohio; Barksdale Field, La.; Mitchell Field, N. Y., and Fairfield-Suisun Airfield, Calif. Training units are located at Eglin Field, Fla. and Langley Field, Va.

Demonstrate Radar Control

A group of high ranking officers, including General Jacob L. Devers, commanding general of the Army Ground Forces, and Maj. Gen. Curtis E. LeMay, Deputy Chief of Air Staff for Research and Development, AAF, at Wright Field, Ohio, 16 Dec. witnessed a demonstration of how radar signals may be used to control a guided missile in its flight to a target.

Employing a B-17 as a "missile" for demonstration purposes, engineers of the Electronic Subdivision of the Air Materiel Command's Engineering Division successfully controlled the 60-mile flight of the aircraft from its position above Wright Field to a point directly over a target selected by one of the visiting officers.

Air Industry Production Plans

The Army Air Forces and the Bureau of Aeronautics will analyze planning studies now being prepared by 22 aircraft and aeronautical equipment manufacturers prior to the formulation of production plans which could be put into effect in the event of a future emergency.

Production planning data will be purchased from industry by both the AAF and the Bureau of Aeronautics, the results of the individual studies to be made available to both services.

This initial expenditure covers the purchase of preliminary planning data covering such aircraft items as fighters, light and heavy bombers, light and heavy transports, jets, and guided missiles. Planning data for such aeronautical equipment as jet engines, landing gears, propellers, automatic pilots and bomb sights are similarly being procured.

Officials of the Air Materiel Command consider this latest project as Phase I of detailed planning with the aircraft and allied industry, while Phase II will be the development of production plans for specific weapons.

Each manufacturer participating in Phase I has established an informal working committee with representatives from each company division—production, engineering, research, sales, personnel, and others—which is currently compiling data, later to be forwarded to the Air Materiel Command for study.

Air Materiel Command officials state that the data compiled will be derived in part from World War II experiences of the companies in expanding their production to meet war needs. It is expected that many handicaps encountered by the aircraft manufacturing companies in expanding production such as contract negotiation, plant expansion, mass production techniques, material controls, etc., will be completely aired by the companies in their respective studies. Individual manufacturers are being encouraged to do considerable original thinking on these problems.

The fundamental requirements of air industrial preparedness planning are an adequate research and development program that carries through production in limited quantities to provide production proving and service testing; the maintenance of a healthy nucleus of an aircraft industry capable of rapid expansion and supported by a program of continuing military production; the assurance of an industrial reserve of production facilities and resources, and a program of specific industrial preparedness plans, undertaken jointly between the Air Forces and Industry, to maintain our newest air weapons in a state of readiness for volume production.

Although the Bureau of Aeronautics has also issued contracts to manufacturers, the following manufacturers are cooperating with the Air Materiel Command in preparing these studies: Beech Aircraft Corporation, Bell Aircraft Corporation, Boeing Aircraft Company, Cessna Aircraft Company, Consolidated-Vultee Aircraft Corporation, Douglas Aircraft Company, Inc., Fairchild Engine & Airplane Corporation, Lockheed Aircraft Corporation, Northrop Aircraft Inc., The Glenn L. Martin Company, North American Aviation Inc., and the Republic Aviation Corporation.

Producers of aeronautical equipment included are: Allison Division, General Motors Corporation; Bendix Products Division of Bendix Aviation Corporation; The Cleveland Pneumatic Tool Company; Curtiss-Wright Corporation; The Goodyear Tire and Rubber Company, Inc.; Jack & Heintz Precision Industries, Inc.; A. O. Smith Corporation; Sperry-Gyroscope Company; Victor Adding Machine Company, and Wright Aeronautical Corporation.

Trans-Pacific ATC

Three round trips weekly direct from Fairfield, Calif., to Shanghai, China, via Hickam Field, Johnston, Kwajalein, Guam and Okinawa is the principal change in the Trans-Pacific schedules of the Pacific Division of the Air Transport Command which went into effect this week, it was announced at Division headquarters, Hickam Field.

The change is expected to reduce considerably the elapsed time of trips between the mainland and China. Heretofore, China traffic was routed through either Manila or Tokyo. It also gives military personnel on Okinawa, direct service for the first time to and from the mainland, affording speedier transportation of mail and urgently needed cargo and personnel.

The former Manila-Shanghai run has been eliminated and traffic originating at Manila for Shanghai will be routed by way of Okinawa.

The Guam-Manila route frequency has been reduced by one trip weekly and the Tokyo-Peiping route has been discontinued altogether, the trip now going by way of Shanghai.

The air lift to Tokyo and Manila is not affected by the new schedule.

The current schedules call for operation of the following point-to-point frequencies:

Trans-Pac Operation	
Fairfield-Hickam	42 trips weekly
Hickam-Tokyo	19 trips weekly
Hickam-Shanghai	3 trips weekly
Hickam-Manila	6 trips weekly
Hickam-Tontouta	2 trips weekly
Kwajalein-Tarawa (C-47)	2 trips weekly
Tokyo Fleet Operations	
Tokyo-Shanghai-Peiping	2 trips weekly
Tokyo-Okinawa-Manila	2 trips weekly
Alaskan Operation	
Great Falls-Fairbanks	7 trips weekly (3½ by water route & 3½ by inland route)
Great Falls-Whitehorse (C-47)	1 trip weekly

Seek Atom-Smashing Data

Under the sponsorship of the Office of Naval Research, three Army Air Force B-29s will fly some of the world's leading physicists high above the clouds this month to seek answers to atom-smashing through the most effective atom-smashers known—cosmic rays.

The experiments will bring scientists into a new phase of the study of the elusive cosmic ray. For the first time, it will be possible to take a fully equipped laboratory as high as 40,000 feet into the atmosphere and to conduct studies at specified altitudes over extended periods of time.

The flights will be made from the Naval Ordnance Test Station at Inyokern, Calif. In the past, scientists have obtained observations at elevations of 15,000 to 20,000 feet by great effort in setting up laboratories on mountain peaks.

Two ATC Services Move

Army Air Forces headquarters recently disclosed that transfer of the headquarters of two Air Transport Command services had been ordered by Maj. Gen. Robert M. Webster, ATC, commanding general.

Headquarters of the Airways and Air Communications Service commanded by Maj. Gen. Harold M. McClelland, will move from Langley Field, Va., to AAF Annex No. 1, Gravelly Point, Va., location of ATC headquarters.

Flying Safety Service headquarters has been transferred from Langley Field to the Pentagon in Washington and hereafter will function under AAF headquartes. Col. John Persons is commanding officer.

AAF Orders Jet Fighters

The Air Materiel Command has announced that Republic Aviation Corporation has received new military aircraft orders totalling over $25 million.

The bulk of the new order is for an undisclosed additional number of P-84 Thunder-jets.

SCHOOL AND CAMP DIRECTORY

The Schools and Camps listed below are effectively equipped to care for the educational and recreational needs of the children of members of the services and this Directory is recognized as an authentic and reliable aid to service parents in solving the problem of child education. For details as to the Schools listed in this Directory address them directly or communicate with the Army and Navy Journal Department of Education, 1711 Conn. Ave., Washington 9, D. C.

ALABAMA

MARION INSTITUTE MARION, ALABAMA
Specializes in preparation for Annapolis and West Point. Fully accredited four-year High School and Junior College. R.O.T.C. Military training. Sports. 2 football fields, tennis courts. 30-acre campus. 104th year. Write for catalog. Col. J. T. Murfee, President, Box J, Marion, Alabama.

CONNECTICUT

MILFORD *FAMOUS FOR ITS TEACHING for the past 35 years*
Boarding School preparing for leading colleges located in Beautiful New England town on Long Island Sound. Emphasis on sound scholarship through personal attention in very small classes. Rounded school life with full program of extra-curricular activities. Separate lower school.
W. D. Pearson, Headmaster — Milford, Conn.

GEORGIA

GEORGIA MILITARY ACADEMY
8 miles from Atlanta—Fine, equable climate Many cultural advantages—accredited. Courses of study. College and West Point—Annapolis Prep., Jr. Colleges. 3-year courses in Bus. Adm. for high school grads. Post Grad. course to strengthen foundation for college. Junior school. A separate department for young boys. Athletics. Expert coaches develop teams in major sports. Home life. Cadets live in small groups with their teachers.
For Catalog address: Col. W. P. Brewster, College Park, Ga.

NEW YORK

PEEKSKILL MILITARY ACADEMY
Accredited preparation for all colleges including West Point & Annapolis. Business course optional. Study and development of individual capacities. Small classes. Physical training for all. Horseback Riding, Swimming Pool, Music, Dramatics, Social activities. Senior & Junior Schools. 112th year. Write for Catalog. Telephone 321. Col. Thomas K. Fisher, Headmaster, Box 44-A, Peekskill-on-Hudson, N. Y.

NEW YORK

The BRADEN SCHOOL
Preparing for West Point and Annapolis
H. V. Van Slyke, Cornwall-on-Hudson, N. Y.

★ ★ PREPARING FOR ★ ★
WEST POINT ANNAPOLIS
STANTON PREPARATORY ACADEMY
CORNWALL, N. Y.
Approved for Veterans under G.I. Bill of Rights
COL. H. O. STANTON
Graduate, West Point, former instructor and Asst. Prof., U.S.M.A., West Point, N. Y.
COL. H. P. TASKER
Graduate, West Point, and former instructor, U.S.M.A., West Point, N. Y.

SOUTH CAROLINA

CARLISLE MILITARY SCHOOL develops manly men through cultivation of physical, mental, spiritual qualities. Small classes. Pre-aviation course. Boys from 20 states. All sports. Cadet band. Non-sectarian. Also sub-freshmen dept., 7th-8th grades. Rate $650, Catalog.
Col. Jas. F. Risher, Headmaster, Bamberg, S. C.

WASHINGTON, D. C.

THE HILDER SCHOOL
Outstanding preparation for
WEST POINT ANNAPOLIS
COAST GUARD ACADEMY
Small classes. Superior results. All our West Point presidential candidates won appointments in 1946.
1310 Twentieth St., N. W. — Leonard O. Hilder
Washington 6, D. C. — Principal

SULLIVAN SCHOOL
ANNAPOLIS • WEST POINT PREP
Approved for veterans under the G.I. Bill of Rights. Our students won over 60% of Army Presidentials 1946, including the first four places.
Lieutenant G. J. Sullivan (Retired)
Box J, 2107 Wyoming Ave., Washington 8, D. C.

FINGERPRINTING
Fingerprinting, Identification, Scientific Crime Detection, Criminology & Penology
Practical Courses
For Responsible Men & Women
APPROVED for VETERAN TRAINING
Catalogue on Request
New Term February 27
DR. W. NISSON BRENNER, Director
PENNA. INSTITUTE OF CRIMINOLOGY
431 WALNUT ST. PHILA. 6, PA.

Navy Orders

(*Continued from Page* 377)

136, to ComCruDiv-13.

Jack S. Holtwick, jr., PacFlt, to CO, USS Platte, AO 24.

Marion N. Little, BuPers, to CO, USS Bremerton, CA 130.

Charles A. Nicholson, BuAer, to Asst Chief for Design and Engineering.

Evander W. Sylvester, Mare Island Naval Shipyard, to Comdr., Puget Sound Naval Shipyard.

Commanders

William L. Brantley, NAS, Banana River, Fla., to CO, USS Medium Sea Plane 5.

Dale R. Frakes, Navop, to USNA, Annapolis.

Victor A. King, NavBase, Terminal Is., Calif., to be Pers. Officer.

Michael G. Mitchell, S(1), JAG's office, to RecSta, Wash., D. C., for sep.

Howard A. Morse, (S), JAG's office, to RecSta, Wash., D. C., for sep.

Stanley Mumford, (SC), New York, to Fiscal Officer, New York Naval Shipyard.

Robert E. Rock, (MC), Mare Island Naval Shipyard, to O-in-C, Epidemiology Unit No. 82.

Bernard F. Roeler, XO, USS New Jersey, BB 62, to CO, USS Lowry, DD 770.

Joseph C. Snyder, (D), Navop, to RecSta, Wash., D. C., for sep.

Lieut. Comdrs.

Myra Allen Clark, (NC), USNH, Alea Heights, T. H., to USNH, Oakland, Calif.

Walter C. Cole, CO, USS Lamberton, AG 21, to CO, USS McCook, DMS 36.

Marion E. Chatterton, (NC), USNH, Sampson, N. Y., to USNH, Newport, R. I.

Helen C. Gorzelanski, (NC), NAS, Alameda, to USNH, Mare Island.

Clarence A. Hawkins, USNH, Bethesda, Md., to exam by Retiring Bd and orders home.

Robert L. Lowell, USS North Carolina, BB 55, to Gunnery Officer, USS Providence, CL 82.

Raymond C. McGrath, Fleet Air, Alameda, to Fleet Air West Coast.

Robert R. Stoinoff, Com-7, to NATB, Pensacola, Fla.

Dott E. Zook, USS Macon, CA 132, to Gunnery Officer, USS Randolph, CV 15.

To RecSta, Wash., D. C., for sep., from stations indicated:

Benjamin B. Aiken, (S), BuPers.
Ruth C. Brown, (W), BuOrd.
Gene Demambro, (S), BuAer.
C. M. Featherstone, jr., S(O), BuOrd.
Robert E. Hart, D(L), BuOrd.
John S. Roberts, S(O), BuOrd.

16 Dec., 1946

Vice Admiral

Aubrey W. Fitch, Supt., USNA, Annapolis, to Office of Under SecNav.

Rear Admirals

James L. Holloway, jr., Asst. Chief of BuPers, to Supt., USNA, Annapolis; add. duty as Comdt., SIRNC.

Robert P. McConnell, Navop, to ComCrDiv-15.

Captains

Joseph A. Callaghan, CO, USS Oneida, APA 221, to Navop.

William F. Dietrich, BuPers, to Gen Inspector, BRNC.

Roy W. Lajeunesse, XO, NAD, Mare Island, to CO, USS Chilton, APA 38.

Harry F. Miller, DesFlot-3, to Chief staff officer, DesFlot-1.

Commanders

Anson A. Bigelow, (S), USNH, Brooklyn, to exam by Retiring Bd and orders home.

Alden B. Chace, Terminal Is., Calif., to Mat. Div. office of AsstSecNav.

Edwin G. Conley, TransDiv-13, to XO, NOB, Adak.

John H. Theis, Norfolk, Va., resigned from USN.

To RecSta, Wash., D. C., for sep. from stations indicated:

Paul N. Culp, (S), Navy Dept.
Joseph G. Poliak, S(O), BuOrd.
F. W. Russe, jr., S(O3), BuOrd.
George Vaux, (S), ONR.
W. L. Williams, jr., S(1), Navop.

Lieut. Comdrs.

Frederick W. Beck, jr., (SC), USNH, Norfolk, to exam by Retiring Bd and orders home.

Charles R. Bell, Com-3, resigned from USN.

Joseph N. Crandall, (ChC), NAS, Miami, to AmphTngBase, Little Creek, Va.

William N. Crofford, USNH, Bethesda, Md., to exam by Retiring Bd and orders home.

William H. Deibler, jr., USS Johnston, DD 821, resigned from USN.

George R. Fraser, (A)-T, ONR, to CO, Airborne Coordinating Group, Naval Research Lab.

John W. Huening, (A1), USNH, Jacksonville, Fla., to exam by Retiring Bd and orders home.

Rose Mallen, (NC), Ottumwa, Iowa, to USNH, NTC, Great Lakes.

Robert L. Mundhenk, USS Toledo, CA 133, resigned from USN.

George Partis, Com-12, to Communications Officer, USS Randall, APA 224.

William H. Pipkorn, BuAer, resigned from USN.

Carl E. Richards, USS Cortland, APA 75, to XO, USS Nantahala, AO 60.

Charles G. Rowe, S(1), USNH, Bethesda, Md., to exam by Retiring Bd and orders home.

Laura M. Sanderson, (NC), USNH, Newport, R. I., to USNH, Jacksonville, Fla.

John H. Smith, USNH, Newport, R. I., to exam by Retiring Bd and orders home.

Barbara H. Stevens, (NC), Norfolk, to USNH, St. Albans, N. Y.

Arabion N. Taylor, (MC), NAD, Hawthorne, Nev., resigned from USN.

To RecSta, Wash., D. C., for sep., from stations indicated:

Beverley L. Britton, D(L), Navy Dept.
Woodrow W. Brunson, S(1), BuDocks.
Fred V. Collins, C(L), Navy Dept.
Richard D. McCarty, D(L), Navy Dept.
M. W. Robinson, (D), Navy Dept.

17 December 1946

Captains

Elmer O. Davis, BuPers, to Analyst, Office of AsstSecNav.

Ralph E. Hanson, Albany, Calif., to Inspector-Instructor of USNR, San Francisco.

George N. Robillard, Buships; resigned from USN.

Ralph G. Risley, (Ret.) Com-13, to proceed home; relieved active duty.

Commanders

Harold G. Davies, (DC) USS Kermit Roosevelt, ARG 16, to USS Nereus, AS 17.

Vincent D. Engels, S(1), Navop, to RecSta, Wash., D. C., for sep.

Victor S. Falk, (MC) USNH, NTC, Great Lakes; resigned from USN.

William M. Gustafson, (CEC), Orange, Tex. to Public Works Dept. Com-15.

Wesley B. Jones, (DC), Norfolk, to Norfolk Naval Shipyard.

John H. Keller, (MC), Bainbridge, Md.; resigned from USN.

Thomas W. McConville, (D), BuShips, to RecSta, Wash., D. C., for sep.

Clark H. Miley, (SC), USNH, Long Beach, to exam by Retiring Bd. and orders home.

John H. Pinholster (MC), home; resigned from USNR.

Harry W. Von Hassein, USNH, Chelsea, Mass., to exam by Retiring Bd. and orders home.

Clifford J. WAAS, (DC), Portsmouth, Va., to USNH, Portsmouth, N. H.

Lieutenant Commanders

Paul S. Bazler, Jr., Com-9, to NATB, Corpus Christi.

Charles A. Beard (D)L, Navy Dept., to RecSta, Wash., D. C., for sep.

John S. Neblett D(L), Los Angeles, to Asst SupInsMat, Los Angeles.

Dwight D. Nott, VHP-7, to Pre-Flight Sch, Ottuma, Iowa.

Robert D. Nye, St. Simons Is., Ga., to Air Lant.

Howard J. Silberstein, St. Simons Is., Ga., to Point Mugu, Calif.

Harley F. Smart, Com-11, to Repair officer, USS Dixie, AD 14.

John S. Ullmann S(A), BuAer, to NAircraft Modification Unit, Johnsville, Pa.

Resignations of the following officers have been accepted:

E. E. Cale, jr (MC), USNH, Corpus Christi.
R. H. Leeds (MC), NAS, Seattle.
A. G. Lueck (MC), USNH, Great Lakes.

For an expert and experienced translator of German, technical or military, from

GUIDED MISSILES to RADAR

call on

TECHNICAL TRANSLATIONS

5112 45th St., NW EM 7083

Gen. Rooks Heads UNRRA

Maj. Gen. Lowell W. Rooks, USA-Ret., who has been serving as Deputy Director General of UNRRA, has been named to wind up the affairs of that organization following the resignation of Director General La Guardia.

General Rooks was Deputy Assistant Chief of Staff, G-3, SHAEF. in 1945.

Col. Wessels on Rifle Board

Col. Theodore F. Wessels of Portland, Conn., has just been appointed a member of the National Board for the Promotion of Rifle Practice, the War Department announced 18 Dec. Colonel Wessels will also serve as Executive Officer of the Board and as the Director of Civilian Marksmanship.

Renew your Army and Navy Journal subscription promptly to avoid missing any issues.

Season's Greetings

AMERICAN OIL COMPANY

WARNING!

THIS IS THE TIME TO ACT!

Magazine Subscription rates are going up . . . up . . . up! Your reading enjoyment will cost you LESS if you order from *this* ad. Subscriptions can be sent to Home or Military address.

Last Call for MILITARY RATES

Available to ACTIVE and INACTIVE MILITARY PERSONNEL (be sure to give former rank).
These and other magazines will discontinue their military rates December 31, 1946.

LIFE	Now $3.50 yr.	Will be $5.50
TIME	Now $3.50 yr.	Will be $6.50
NEWSWEEK	Now $3.50 yr.	Will be $6.50
FORTUNE	Now $6.00 yr.	Will be $10.00

ORDER NOW AND SAVE!

BETTER HOMES and GARDENS Now 2 years $3—will be $5

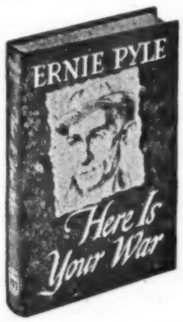

"BEST SELLERS"

AT BARGAIN PRICES

Books YOU like to read—below original publishers prices. Order by number, please.

22. ERNIE PYLE'S HERE IS YOUR WAR (Story of GI Joe). This is a MUST with every GI or veteran $1.00

2. UP FRONT—Bill Mauldin. Joe and Willie in top form. Favorite with soldiers and civilians alike $1.00

5. FOR MEN ONLY—Edited by James M. Cain. Man-sized tales of Hemingway, Steinbeck, others $1.00

SEND FOR CATALOG

DON'T MISS THESE OTHER GOOD BUYS!

Prices are for 1 year unless stated otherwise

...Aero Digest $3.00
...American Helicopter 3.50
...American Home —3 yr. 3.00
...American Magazine 3.00
...Army & Navy Ja'l 5.00
...Army Times 2.00
...Atlantic Monthly .. 4.00
...Better Homes and Gardens—3 yr. .. 3.00
...Calling All Boys .. 1.00
...Calling All Girls .. 1.00
...Camera 3.50
...Charm 2.50
...Child Life 3.00
...Coronet 2.75
...Cosmopolitan 3.50
...Cosmopolitan—2 yr. 5.50
...Cue 3.00
...Esquire 6.00
...Etude 2.50
...Field and Stream . 2.00
...Flower Grower 2.50
...Flower Grower—2 yr. 4.00
...Flying 3.00
...Forbes Magazine . 4.00
...Glamour 2.00
...Good Housekeeping 3.50
...Good Housekeeping—2 yr. 5.50
...Gourmet 3.50
...Harper's Magazine 4.00
...Holiday 5.00
...Home Garden 3.00
...Homemaker 3.00
...House and Garden 4.00
...House and Garden —2 yr. 6.00
...Junior Bazaar 3.00
...Ladies Home Ja'l. 3.00
...Liberty 3.50
...Look 2.50
...Mademoiselle 3.50
.. Mademoiselle—2 yr. 6.00
...Magazine Digest . 3.00
...Mayfair (Amer. Fashion Mag.) .. 4.00
...McCall's Magazine 2.50
...McCall's Magazine —2 yr. 4.00
...Motor Boating ... 3.00
...New Yorker 6.00
...Omnibook 4.00
...Outdoor Life 2.00
...Pageant 3.00
...Parents' Magazine 2.50
...Parents' Magazine —2 yr. 3.75
...Pathfinder 1.00
...Physical Culture .. 3.00
...Photoplay-Movie Mirror 1.80
...Pic 2.50
...Popular Mechanics 2.50
...Popular Photography 3.00
...Popular Science Monthly 2.50
...Reader's Digest .. 2.75
...Reader's Digest—2 yr. 5.00
...Redbook Magazine 2.50
...Sat. Eve. Post 5.00
...Sat. Eve. Post—2 yr. 7.50
...Saturday Review of Literature 6.00
...Science Illustrated 3.00
...Science Digest 3.00
...Scientific American 4.00
...Skyways 3.00
...Sports Afield 2.00
...True 3.00
...True Comics 1.00
...U. S. Camera 1.50
...United States News 4.00
...Vogue Pattern Book 2.00
...Walt Disney's Comics & Stories 1.00
...Woman (The) 3.00
...Woman's Home Comp. 2.50
...Woman's Home Comp.—2 yr. 4.00
...World Report 4.00

WE GUARANTEE TO FORWARD MAGAZINES EVERYWHERE

PRICES SUBJECT TO PUBLISHERS' CHANGES

SHEPARD W. DAVIS & CO. 12-21
Authorized Publishers' Representatives—Military Dept.
30 Bay St., Staten Island 1, N. Y.

ENCLOSED IS $..... for which please send the magazines checked:

NAME .....

ADDRESS .....

TOWN .....

(Use separate sheet of paper if necessary)

CATALOG CONTAINING CIVILIAN RATES AS WELL AS MILITARY RATES SENT UPON REQUEST

Marine Corps Orders

(*Continued from Page 377*)

Ellsworth N. Murray, HQMC, to D of P.

Arthur H. Adams, NA, El Toro, to Amph Warfare Schl, Jr Crs, MCS, MB, Quantico.

Norman J. Anderson, NA, El Toro, to Amph Warfare Sch, Jr Crs, MCS, MB, Quantico.

William E. Clasen, NA, Miramar, to Amph Warfare Sch, Jr Crs, MCS, MB, Quantico.

William C. Humberd, NA, Miramar, to AmphWarfare Sch, Jr Crs, MCS, MB, Quantico.

Willis V. Harris, AQM, Barstow, Okla., home to assume inactive status on retired list.

Thomas A. Culhane, jr., HQMC, to Inspector-Instructor, 2d Inf Bn, Boston.

William F. Lantz, San Diego, to Staff, Armed Forces Staff Col, Norfolk.

Clark J. Bennett, 2d Marines, to HqSq 2d MarDiv.

Majors

Stoddard G. Cortelyou, Pensacola, to NAS, Jacksonville.

Charles B. Peterson, Cherry Point, home to be relieved from active duty.

Paul M. Jones, AmphForPac, to TTU, Amph TngComd, LantFlt.

Richard L. Boll, Terminal Island, to MB, NOB, Kodiak.

Louis H. Wilson, jr., FMFPac, to Hq&Serv Bn, FMFPac.

John B. Sweeney, 7thCasOffDet, to 1st Bn, 5th Marines.

Paul J. Krueger, NAVC, VMR-952, home to be relieved from active duty.

Robert Q. Gridger, Charleston, S. C., to 2d MarDiv.

Henry H. Reichner, San Diego, to MB, NY-NSYd, Brooklyn.

Thomas M. Burton, 2dMarDiv, to AmphWarfare Schl, Jr Crs, MCS,MB, Quantico.

John W. Zuber, NAV, to active duty at Mar AirWest.

Raymond M. Hogue, Camp Lejeune, to 1st MarDiv.

Paul E. Becker, jr., San Diego, to 1stMarDiv.

Edward M. Barrett, Bremerton, resigned effective 30 Nov.

John "E" Hughes, NA, VMF-953, to SMS MAG-25.

Arthur N. Nehf, jr., NA, MarAirWest, to HqSq MarAirWest.

Charles H. Cowles, Chicago, to 2dMarDiv.

Harold A. Harwood, NA, USNA, Annapolis, to office of CNO.

John S. Dewey, to active duty at MB, Camp Lejeune.

Jack A. Church, NA, San Diego, to HqSq MAG-25.

Captains

Walter R. Anderson, jr., Ewa, T.H., to MCAB, Cherry Point.

Laurence A. Ballinger, APM, Great Lakes, to Disb. Br, Supply Dept, HQMC.

Joel L. Neuman, NAVC, St Simons Is., Ga., home to be relieved from active duty.

William T. Farley, San Diego, to D of P.

George B. McManus, 1stMarDiv, to 1stBn 5th Marines.

Roy M. DuCharm, 7th CasOffDet, to 1stBn 5th Marines.

Thomas M. Fields, HQMC, to Asst. Inspector-Instructor, 6th Inf Bn, Philadelphia.

James M. Callender, HQMC, to Asst. Inspector-Instructor, 1st 155mm Howitzer Bn, Philadelphia.

Walter E. Reynolds, jr., HQMC, to Inspector-Instructor, 11th Tank Bn, San Diego.

Robert S. Wilson, HQMC, Asst. Inspector-Instructor, 13th Inf Bn, Los Angeles.

William A. Easterling, USNH, Bethesda, Md., home to assume inactive status in FMCR.

Angus J. Cronin, MarGarForPac, to MB, Saipan.

Cyril D. Jeffcoat, San Diego, to 2d Mar Div.

John LeMay, jr., San Diego, to 2d MarDiv.

William T. Taylor, San Diego, to DofS, Philadelphia.

Nicholas Cappeletto, 6th Marines, to Tank Co, 3d MarBrig.

Robert H. Venn, 2dMarDiv, to 1st Bn 2d Marines.

Charles A. Labbo, 2dMarDiv, to H&SCo 8th Marines.

Frederick V. Osborn, 2dMarDiv, to 2d Serv Bn.

Wallace D. Blatt, NAV, Cherry Point, to MCAS, Quantico.

Philip J. Mylod, on discharge from USNH, St Albans, N.Y., home to await retirement.

Elster C. Colley, Camp Lejeune, to 1stMar Div.

Eugene P. Claude, 1stMarDiv, to 1stBn 11th Marines.

Howard D. Hudson, 111th ReplDraft, to Hqs5thServDepot, SC, FMFPac.

Daniel J. Regan, NA, 2dMarDiv, to 1stBn 2d Marines.

John Callahan, NA, VMF-218, to HqSq MAG-24.

Matthew C. Cunningham, jr., NAVC, MACSq-11, to MCAS, Cherry Point.

Melvin J. Flannagan, NA, Cherry Point, to MGCISq-6.

James N. Gaut, AQM, MarAirWest, to SMS MAG-33.

Billy C. Marks, NA, MarAirWest, to MACSq-1.

John G. Prestridge, Cherry Point, to HqSq MAW-2.

Wilson "C" Terry, NA, MarAirWest, to Hq Sq AirFMFPac.

Dwain LaB. Lengel, Dallas, Tex., to Avn Det, MB, NATB, Corpus Christi.

George C. Henshaw, NA, Cherry Point, to HqSq MACGr-1.

Gus C. Daskalakis, NA, orders detaching from VMF-312 are revoked.

Thomas D. Stockwell, jr., NA, New Orleans, to MAD, NATTC, Memphis.

Warren P. Nichols, NAVC, orders detaching from MAD, NAS, Dallas, are revoked.

Billie C. Forrester, NAVC, on discharge from USNH, Great Lakes, home to await retirement.

William B. Allison, on discharge from USNH, Bethesda, Md., home to await retirement.

Alan M. Stewart, to active duty with 2d MarDiv.

Frederick W. Baker, jr., 2dMarDiv, to Hq Bn 8th Marines.

Michael F. Wojcik, TTU, TC, AmphForPac, to TTU, TC, AmphTrngComdLant.

From TTU, TC, AmphForPac, to AmphTng Comd, LantFlt:

F. H. Brinkman	Richard Morton
J. V. C. Young	Charles H. Horn

From TTU, TC, AmphForPac, to 2d MarDiv:

R. K. Dahl	George A. Lavis
T. B. Stidham	

First Lieutenants

Jack E. Woodburn, jr., Great Lakes, to Office of DO, Chicago.

A. W. Whittinghill, Avn-CP, MACGr-1, home to be relieved from active duty.

Gerald J. Curran, on discharge from USNH, San Leandro, Calif., home to await retirement.

Theodore W. Turcotte, San Diego, to Office of DO, MCAB, Cherry Point.

William T. Taylor, jr., to active duty, 2d MarDiv.

To Signal Supply Officers Course, Electronic Supply Div, DofS, Philadelphia, from station indicated:

Richard E. Oderwald, Camp Lejeune.
Leslie L. Davenport, San Diego.
Billy E. Horner, San Diego.

George S. Atcheson, FMFPac, to MT&RC, San Diego.

George W. Callen, D of P, to MB, NavReTng Comd, NavBase, Vallejo, Calif.

Richard T. Milyard, D of P, to Hq&Serv Bn, FMFPac.

"J" "B" Trant, NAVC, on discharge from USNH, Corona, Calif., to MarAirWest.

William R. Morrison, HQMC, to Asst. Inspector-Instructor, 2d 105mm Howitzer Bn, Los Angeles.

Alfred J. Anton, MB, Wash., D. C., to MB, NA, Wash., D. C.

Robert H. Barrow, D of P, to FMFLant.

James R. Poe, San Juan, P.R., admitted to USNH, Bethesda, Md.

Isadore H. Rudnick, AVS, Cherry Point, home to be relieved from active duty.

Raymond F. Webb, Quantico, to MAD, NATTC, Memphis.

Butler V. Avery, jr., NAVC, MAG-24, home to be relieved from active duty.

Alan E. Lowry, Quantico, to MB, NTC, Great Lakes.

Charles C. Bock, 2dMTBn, to MB, NYNSYd, Brooklyn, for sep.

Harry Hunter, jr., NA, VMF(N)-533, to Hqs, D of P.

Gerould McL. Rumble, jr., FMFPac, to MT &RC, San Diego.

John D. Case, 2dMarDiv, to 1stBn, 2d Marines.

William E. Barber, 2d MarDiv, to 1stBn, 8th Marines.

Harry R. Neudorffer, NA, VMR-253, to VMR-152.

John B. Sullivan, 2dMarDiv, to 1stBn, 10th Marines.

Boyce L. Lassiter, AmphForPac, to 2dMar Div.

Philip R. Hade, AmphForPac, to 2dMarDiv.

Elmer A. Krieg, Bainbridge, Md., to MB, NA, NGF, Wash, D.C.

Thornwell R. Mangum, 2dMarDiv, to Amph Warfare Sch, Jr Crs, MCS, MB, Quantico.

Marion M. Permenter, AVS, MGCISq-7, home to be relieved from active duty.

Gerard F. J. Fraioli, FMFPac, to 1stMarDiv.

Elbert L. O'Banion, FMFPac, to 1st MarDiv.

Lawrence V. M. Wickham, FMFPac, to Force Hq&ServBn, FMFPac.

Edwin R. Scotcher, Brooklyn, resigned effective 22 Dec.

Holden C. West, Atlanta, resigned effective 14 Nov.

Billy H. Snyder, Pearl Harbor, to MarGar ForPac.

Edward J. Miller, 7thCasOffDet, to 1st Bn 11th Marines.

Gerald A. Yaleske, FMFPac, to NTC, Great Lakes.

William K. Byrd, 2dMarDiv, to Weapons Co., 8th Marines.

George A. Phillips, NA, Dallas, Tex., to Avn Det, MB, NATB, Corpus Christi.

James W. Smith, Cherry Point, to HqSq MACGr-1.

Robert "J" Zitnik, Cherry Point, to HqSq MACGr-1.

Gerald D. Allen, NA, VMR-153, to HqSq MAW-1.

Hugo D. Argo, NA, VMR-253, to HqSq Mar AirWest.

James R. Carmichael, NAVC, MAW-2, to VMF-212.

William B. Creel, Cherry Point, to HqSq MAW-2.

Norman L. Hamm, NA, Miramar, to MCAS, El Toro.

Frank R. Leech, jr., MAG-11, to HqSq MAW-2.

John P. McCullough, NA, MAW-2, to VMF-222.

James V. Townsend, NAVC, MAG-12, to VMF-452.

George S. Mansfield, FMFPac, to 1stMarDiv.

William J. Peter, jr., FMFPac, to 1stMar Div.

Frank P. Stivers, jr., FMFPac, to 1stMar Div.

Warren E. Ray, orders detaching from 10th Marines are revoked.

Phillip A. Terrell, jr., San Diego, to DofS, Philadelphia.

Richard L. McGrath, AVS, Cherry Point, home to be relieved from active duty.

Thornwell R. Mangum, Philadelphia, to 2d MarDiv.

John P. McLaughlin, Pensacola, to NAS, Jacksonville.

Paul D. LaFond, HQMC, to Asst. Inspector-Instructor, 2d InfBn, Boston.

Keith J. Adams, NAVC, MACSq-1, home to be relieved from active duty.

Thomas H. Murphy, El Toro, home to be relieved from active duty.

Matthew A. Clary, jr., to active duty with 2dMarDiv.

James C. McFerran, III, to active duty with 2dMarDiv.

Charles R. Miller, NAV, to active duty MAD, NAS, San Diego.

Jack H. Hagler, MarGarFor, to HqBn 1st MarDiv.

Waldo C. Perry, Pearl Harbor, to MC Supply Depot, Oahu, T.H.

Dennis D. Damsgaard, San Diego, to NTC, Great Lakes.

Second Lieutenants

Chew E. Lee, 7thCasOffDet, to 2dBn 5th Marines.

William D. Arnold, 2dMarDiv, to 2dBn 8th Marines.

Charles W. Harris, FMFPac, to 1stEngr Bn.

Newton Chessin, FMFPac, to NTC, Great Lakes, for sep.

John D. Deacon, 1stPioneerBn, to MB NY-NSYd Brooklyn.

Jack Herod, 10th Marines, to 1stBn 8th Marines.

Charles S. Stribling, 2dServBn, to 2dBn 8th Marines.

Fitzhugh L. Buchanan, jr., FMFPac, to 1st Mar Div.

Warren A. Savage, FMFPac, to 1stMarDiv.

Fred J. Drinkwater, III, NAVC, Pensacola, to MD, NAAS, Cecil Fld, Fla.

Manfred F. Gildner, jr., NAVC, Cherry Point, to VMF-461.

Leo Gumienny, NA, MAG-24, to VMF-211.

William F. Halverhout, NAVC, Cherry Point, to VMF-225.

Robert S. Hoot, NAV, AirFMFPac, to HqSq AirFMFPac.

Ray E. Hudson, NAVC, Pensacola, to MD, NAAS, Cecil Fld, Fla.

Edwin J. Graf, jr., to active duty as CO, MD, USN AdminComd, Armed Forces Staff Col., Norfolk.

Clifford D. Corn, NAVC, Miami, to MarAir West.

Philip K. Whitehouse, NAVC, Miami, to MarAirWest.

Howard E. Stidham, Great Lakes, to 2dMar Div.

Burton Y. Courchesne, NAV, Pensacola, to MCAB, Cherry Point.

Jerry T. Snyder, NAVC, Pensacola, to MCAB, Cherry Point.

William L. Hewetson, 2dBn, to HqBn 1stMar Div.

Ernest L. Herrell, NA, VMF-211, to MD, NAS, Olathe, Kans., for sep.

Gerald G. Hoover, Chicago, to 2dMarDiv.

Louis J. Marinucci, Quantico, home to be relieved from active duty.

Stephen P. Hardesty, Quantico, home to be relieved from active duty.

Charles M. Herbek, jr., Quantico, home to be relieved from active duty.

David M. Brown to active duty in 4th MCR Dist, Pittsburgh.

Elmore G. Smith, San Diego, to instruction in Signal Supply Officers Crs, DofS, Philadelphia.

Robert J. Crepin, 11th Marines, to NTC, Great Lakes.

From Camp Lejeune to 1stMarDiv:

Nuel H. Allen.	F. J. Goff, jr.

From San Diego, to 1stMarDiv:

Michael L. Cannon	Michael Lash, jr.
Robert A. Foyle	Robert J. McNicholas
Robert L. Gover, jr.	Jack B. Phillips
Donald L. Hall	Philip H. Ronzone
Donald F. Hillmer	William F. Young
Kenneth C. Ives	

From Quantico home to be relieved from active duty:

G. K. Elias	S. P. Hardesty
R. G. Dusenbury	C. M. Herbek, jr.
L. J. Marinucci	

Army Orders

(*Continued from Page 377*)

Capt. M. S. Gardner, Coral Gables, Fla., to 7th Army Tenn Mil Dist, Nashville.

Capt. W. B. Hilferty, El Paso, Tex., to Arty Sch, Ft. Bliss, Tex.

Capt. J. E. Lagouros, Ft. Myer, Va., to Hq 2d Army, Baltimore, Md.

Capt. R. W. Periowski, Cp McCoy, Wis., to Marmion Mil Academy, Aurora, Ill.

Capt. E. N. Wicks, Ft. Dix, N. J., to AA & GM Br Arty Sch, Ft. Bliss, Tex.

1st Lt. R. M. Cowherd, Ft. Dix, N. J., to RTC, Ft. Jackson, S. C.

1st Lt. T. C. Cox, Cp Beale, Calif., to Arty Sch, Ft. Winfield Scott, Calif.

AIR CORPS

Col. T. J. Koenig, Wash., D. C., to 100th AAF BU, Mitchel Fld, N. Y.

Col. K. L. Riddle, Mitchel Fld, N. Y., to Armed Forces Staff College, Norfolk, Va.

Col. V. L. Stintzi, Scott Fld, Ill., to Office US Jt C of S, Wash., D. C.

Col. E. C. Teats, March Fld, Calif., to Armed Forces Staff College, Norfolk, Va.

Lt. Col. A. H. Baker, jr., Craig Fld, Ala., to OC of S, Wash., D. C.

Lt. Col. W. L. Hubbert, Alameda, Calif., to OC of S, Wash., D. C.

Maj. L. H. Burgess, Manchester, N. H., to 1st Army, 1202d ASU Det No. 9, Concord, N. H.

Maj. G B. Diefenbach, Ft. Dix, N. J., to Hq Air Defense Comd, Mitchel Fld, N. Y.

Maj. S. W. Irons, Brooklyn, N. Y., to 1st Army 1202d ASU, NYC.

Maj. D. J. McKinnon, Baltimore, Md., to 2533d AAF BU, Goodfellow Fld, Tex.

Maj. M. J. Novak, March Fld, Calif., to OC of S, Wash., D. C.

Maj. E. T. O'Donnell, Mitchel Fld, N. Y., to 1st Army, 1202d ASU Det No. 1, Syracuse, N. Y.

Maj. J. R. Pryor, Hamilton Fld, Calif., to RTC, Ft. Ord, Calif.

Maj. C. S. Wilkins, St. Louis, Mo., to 5th Army Rctg Sv, Kansas City, Kans.

Maj. L. A. Kuhns, Cleveland, Ohio, to 2d Army Rctg Sv, Canton, Ohio.

Capt. K. Beverly, Cp Campbell, Ky., to 2d Army, A. P. Hill Mil Res, Va.

Capt. A. L. Blaize, Ft. Riley, Kans., to RTC, Ft. Ord, Calif.

Capt. A. Christie, Wright Fld, Ohio, to OC of S, Wash., D. C.

Capt. J. P. Crim, McClellan Fld, Calif., to SFPE, Ft. Mason, Calif.

Capt. A. J. Cronin, Greenville AAB, S. C., to 5th Army, Ft. Sheridan, Ill.

Capt. R. N. Gruendyke, Eglin Fld, Fla., to OC of S, Wash., D. C.

Capt. R. E. Kauffman, Middletown, Pa., to NOPE, New Orleans, La.

Capt. G. A. Lafka, Ft. Riley, Kans., to RTC, Ft. Ord, Calif.

Capt. R. G. Lawrence, jr., Ft. Riley, Kans., to RTC, Ft. Ord, Calif.

Capt. J. S. McCusker, Grenier Fld, N. H., to Cp Kilmer, N. J.

Capt. T. B. Watson, Eglin Fld, Fla., to NOPE, New Orleans, La.

Capt. E. G. Wilson, Bolling Fld, D. C., to RTC, Ft. Dix, N. J.

Capt. A. K. Shelton, Cleveland, Ohio, to 2d Army Rctg Sv, Toledo, Ohio.

Capt. A. E. Sternberg, Balto., Md., to 700th CIC Det 2d AAF BU, Bolling Fld, D. C.

Capt. A. L. Stevens, jr., Cleveland, Ohio, to 2d Army Rctg Sv, Marion, Ohio.

Capt. L. J. Wolfe, Marion, Ohio, to 2d Army Rctg Sta, Akron, Ohio.

1st Lt. D. H. Blakely, Baltimore, Md., to 700th CIC Det 2d AAF BU, Bolling Fld, D. C.

1st Lt. D. J. Connolly, Luke Fld, Ariz., to CIC Ctr Holabird Sig Dep, Balto., Md.

1st Lt. F. Emmerling, Offutt Fld, Nebr., to 5th Army Mo Rctg Dist, St. Louis, Mo.

1st Lt. C. H. Larson, Ft. Oglethorpe, Ga., to RTC, Ft. Lewis, Wash.

1st Lt. F. L. Rowan, Bolling Fld, D. C., to MDW S. Post, Ft. Myer, Va.

1st Lt. J. H. Rice, Biggs Fld, Tex., to 2d Army, Ft. Geo. G. Meade, Md.

1st Lt. R. J. Walker, Panama City, Fla., to Cp Stoneman, Calif.

1st Lt. A. Q. Carroll, Baltimore, Md., to 112th CIC Det 4th Army, San Antonio, Tex.

1st Lt. T. W. Ellison, Louisville, Ky., to 2d Army Rctg Sta, Middlesboro, Ky.

1st Lt. A. L. Holcomb, L. I., N. Y., to I and E Div, NYC.

1st Lt. H. W. Tutt, Cleveland, Ohio, to 2d Army Rctg Sta, Sandusky, Ohio.

Assigned to Schools

Capt. P. J. Christiano, Ft. Worth AA Fld, Tex., to Fordham University, Fordham, N. Y.

Lt. Col. J. A. L. Greco, Wright Fld, Ohio, to University of New Hampshire, Durham, N. H.

1st Lt. J. D. Hull, Pope Fld, N. C., to Rutgers University, New Brunswick, N. J.

Capt. F. H. Hurlbut, Wright Fld, Ohio, to Syracuse University, Syracuse, N. Y.

Capt. L. F. Prouty, Fairfield-Suisun AAB, Calif., to Yale University, New Haven, Conn.

Capt. D. Skandera, jr., Keesler Fld, Miss., to The University of Connecticut, Storrs, Conn.

Capt. J. W. Streeton, Colorado Springs, Colo., to Massachusetts Institute of Technology, Cambridge, Mass.

Capt. J. Swayze, Stockton AA Fld, Calif., to Boston University, Boston, Mass.

Capt. R. E. Vargas, Long Beach AA Fld, Calif., to Massachusetts State College, Amherst, Mass.

Capt. E. A. Vivian, Barksdale Fld, La., to Massachusetts State College, Amherst, Mass.

Lt. Col. J. R. East, Barksdale Fld, Fla., to New York University, University Heights, N. Y.

Capt. J. A. C. Andrews, Wright Fld, Ohio, to Virginia Military Institute, Lexington, Va.

Capt. H. K. Bailey, Pope Fld, N. C., to Virginia Polytechnic Institute, Blacksburg, Va.

Maj. T. L. Barrow, Fairfield-Suisun, AAB, Calif., to University of Maryland, College Park, Md.

1st Lt. R. R. Fowler, Wright Fld, Ohio, to

(*Please turn to Next Page*)

Army Orders

(Continued from Preceding Page)

University of Akron, Akron, Ohio.

Capt. J. C. Hamilton, jr., Greenville AAB, S. C., to Ohio State University, Columbus, Ohio.

Maj. J. M. Hoffman, Wright Fld, Ohio, to Indiana University, Bloomington, Ind.

Maj. C. E. Hoke, Red Bank, N. J., to Lehigh University, Bethlehem, Pa.

Capt. C. C. Houston, Wright Fld, Ohio, to Ohio University, Athens, Ohio.

Capt. R. L. Jones, Long Beach AA Fld, Calif., to Johns Hopkins University, Baltimore, Md.

Capt. J. W. Kierk, Williams Fld, Ariz., to Georgetown University, Washington, D. C.

Lt. Col. M. J. B. Mulholland, Ft. Totten, N. Y. to Lehigh University, Bethlehem, Pa.

Maj. V. J. Sampson, Pope Fld, N. C., to University of Cincinnati, Cincinnati, Ohio.

Capt. L. Spears, Bergstrom Fld, Tex., to University of Kentucky, Lexington, Ky.

Lt. Col. R. L. Walker, Pope Fld, N. C., to Ohio State University, Columbus, Ohio.

1st Lt. E. J. White, Perrin Fld, Tex., to West Virginia University, Morgantown, W. Va.

Capt. W. P. Bruner, Randolph Fld, Tex., to Alabama Polytechnic Institute, Auburn, Ala.

Capt. G. S. Goolsby, Biggs Fld, Tex., to University of Tennessee, Knoxville, Tenn.

Maj. A. H. Hutchinson, jr., Ft. Worth AA Fld, Tex., to Mississippi State College, State College, Miss.

Capt. W. E. McCullough, Boca Raton AA Fld, Fla., to Georgia School of Technology, Atlanta, Ga.

Capt. D. R. May, jr., Boca Raton AA Fld, Fla., to North Carolina State College of Agriculture and Engineering, Raleigh, N. C.

Maj. E. F. Miller, Lowry Fld, Colo., to University of Florida, Gainesville, Fla.

1st Lt. M. M. Reid, Perrin Fld, Tex., to The Citadel, Charleston, S. C.

Lt. Col. G. S. Roberts, Tuskegee AA Fld, Ala., to Tuskegee Institute, Tuskegee, Ala.

Maj. E. D. Robinson, San Antonio, Tex., to University of Georgia, Athens, Ga.

Maj. C. J. Stevens, Kirtland AA Fld, N. Mex., to University of Mississippi, University Station, Miss.

Maj. J. W. Blalock, Bergstrom Fld, Tex., to Louisiana State University, Baton Rouge, La.

Maj. G. D. Gorman, jr., Gravelly Point, N. C., to Oklahoma Agricultural and Mechanical College, Stillwater, Okla.

Capt. F. F. Hollier, jr., Scott Fld, Ill., to University of Arkansas, Fayetteville, Ark.

1st Lt. Warren D. Jackson, Wright Fld, Ohio, to New Mexico College of Agricultural and Mechanical Arts, State College, N. Mex.

Capt. H. V. Myers, Randolph Fld, Tex., to University of Alabama, University, Ala.

Maj. A. Small, Chanute Fld, Ill., to University of Oklahoma, Norman, Okla.

Capt. R. L. Smith, Barksdale Fld, La., to Texas Technological College, Lubbock, Tex.

Capt. J. M. Barley, Barksdale Fld, La., to University of Kansas, Lawrence, Kans.

1st Lt. J. M. Beason, Enid AA Fld, Okla., to University of Minnesota, Minneapolis, Minn.

1st Lt. H. E. Cronk, Wright Fld, Ohio, to University of Wyoming, Laramie, Wyo.

Capt. W. L. Dalton, Pope Fld, N. C., to University of Missouri, Columbia, Mo.

Maj. E. J. Dempsey, Mather Fld, Calif., to University of Illinois, Urbana, Ill.

Capt. P. O. Doornbas, Eglin Fld, Fla., to University of Wyoming, Laramie, Wyo.

Lt. Col. Howard E. Ferguson, McClellan Fld, Calif., to University of Michigan, Ann Arbor, Mich.

Maj. L. S. Henderson, Barksdale Fld, La., to Michigan College of Mining and Technology, Houghton, Mich.

Capt. M. R. Hertz, Wright Fld, Ohio, to University of Wisconsin, Madison, Wis.

Capt. H. L. Moran, Keesler Fld, Miss., to South Dakota State College of Agriculture and Mechanic Arts, Brookings, S. Dak.

Maj. J. A. Smith, Victorville AA Fld, Calif., to University of North Dakota, Grand Forks, N. Dak.

Capt. P. T. Spalla, Wright Fld, Ohio, to Coe College, Cedar Rapids, Iowa.

1st Lt. B. Spiro, Colorado Springs, Colo., to Colorado State College of Agriculture and Mechanic Arts, Ft. Collins, Colo.

Maj. H. W. Stickle, jr., Newark AA Fld, N. J., to Michigan State College of Agriculture and Applied Science, East Lansing, Mich.

1st Lt. W. A. Stouffer, Wright Fld, Ohio, to Municipal University of Wichita, Wichita, Kans.

Maj. F. D. Tomkins, March Fld, Calif., to The University of Iowa, Iowa City, Iowa.

Maj. C. L. Truesdell, McClellan Fld, Calif., to Iowa State College, Ames, Iowa.

Capt. D. H. West, Lake Charles AA Fld, La., to Knox College, Galesburg, Ill.

Maj. G. S. Zinnecker, Barksdale Fld, La., to University of Nebraska, Lincoln, Nebr.

Maj. C. E. Bailey, San Bernardino AA Fld, Calif., to University of Oregon, Eugene, Oreg.

Capt. C. H. Barton, Ft. Totten, Long Island, N. Y., to University of Nevada, Reno, Nev.

1st Lt. O. T. Bowland, Spokane AA Fld, Wash., to Montana State University, Missoula, Mont.

Maj. B. Bryan, Spokane AA Fld, Wash., to Oregon State Agricultural College, Corvallis, Oreg.

Lt. Col. B. C. Cator, March Fld, Calif., to University of Nevada, Reno, Nev.

Maj. J. S. Conlin, Lawson Fld, Ga., to University of Utah, Salt Lake City, Utah.

Lt. Col. M. P. Davis, March Fld, Calif., to State College of Washington, Pullman, Wash.

Capt. C. A. Roitsch, Barksdale Fld, La., to Montana State College, Bozeman, Mont.

Capt. Wilbur J. Schindler, Victorville AA Fld, Calif., to Utah State Agricultural College, Logan, Utah.

Maj. M. E. Speer, Las Vegas AA Fld, Nev., to University of Arizona, Tucson, Ariz.

Maj. W. C. Lindley, Bergstrom Fld, Tex., to Western Kentucky State Teachers' College, Bowling Green, Ky.

CORPS OF ENGINEERS

LT. GEN. R. A. WHEELER, C OF E

Col. H. L. Porter, Ft. Lewis, Wash., to Gen Dep, Belle Mead, N. J.

Col. W. W. Lapsley, Wash., D. C., to Armed Forces Staff College, Norfolk, Va.

Col. C. T. Newton, Vicksburg, Va., to Armed Forces Staff College, Norfolk, Va.

Lt. Col. W. R. Orr, Ft. Belvoir, Va., to Hq 7th Army, Atlanta, Ga.

Lt. Col. P. C. Hyzer, Wash., D. C., to Armed Forces Staff College, Norfolk, Va.

Maj. C. R. Patton, Baltimore, Md., to Hq, Ft. Belvoir, Va.

Maj. C. E. Farris, Ft. Dix, N. J., to Engr Off Repl Pool Tng Ctr, Ft. Belvoir, Va.

Maj. C. S. Johnstone, Ft. Belvoir, Va., to 1st Army, Ft. Monmouth, N. J.

Capt. R. E. Brennan, Cp Hood, Tex., to 4th Army, Ft. Crockett, Tex.

Capt. T. E. Christopher, Atlanta, Ga., to Hq V Corps, Ft. Bragg, N. C.

Capt. R. G. Ebling, Cp Hood, Tex., to 4th Army Det Red River Ars, Texarkana, Tex.

Capt. M. H. Lester, Ft. Belvoir, Va., to 463d AAF BU, Geiger Fld, Wash.

Capt. L. A. Mella, jr., Ft. Lewis, Wash., to Research & Development Sv, Ft. Bliss, Tex.

Capt. W. M. Lewis, Cp Hood, Tex., to 4th Army Det Pine Bluff Ars, Ark.

Capt. N. A. Rial, Cp Hood, Tex., to 4th Army Det Army & Navy GH, Hot Springs, Ark.

Capt. W. J. Sgrillo, Ft. Dix, N. J., to Repl Tng Ctr, Ft. Dix, N. J.

Capt. J. J. Wallner, Cp Hood, Tex., to 4th Army, Ft. Bliss, Tex.

Capt. A. L. Pach, Ft. Monmouth, N. J., to Hq, Ft. Belvoir, Va.

Capt. J. W. Ruby, San Francisco, Calif., to Arty Sch, Ft. Sill, Okla.

Capt. R. C. Silhavy, Ft. Lewis, Wash., to 463d AAF BU, Geiger Fld, Wash.

1st Lt. B. S. Babovec, Ft. Dix, N. J., to 1st Army Det No. 5, NYPE, Brooklyn, N. Y.

1st Lt. W. R. Confer, Ft. Sill, Okla., to 4th Army 988th Engr Treadway Bridge Co, Cp Hood, Tex.

1st Lt. F. A. Cox, Ft. Dix, N. J., to 463d AAF BU, Geiger Fld, Wash.

1st Lt. T. A. Evans, Cp Atterbury, Ind., to RTC, Ft. Knox, Ky.

1st Lt. A. Krause, Cp Hood, Tex., to 4th Army, Det NOPT, New Orleans, La.

1st Lt. T. W. Lee, Ft. Lewis, Wash., to 463d AAF BU, Geiger Fld, Wash.

1st Lt. W. D. Sanborn, Ft. Belvoir, Va., to 463d AAF BU, Geiger Fld, Wash.

1st Lt. J. A. Speary, Cp Kilmer, N. J., to 1st Army, Ft. Jay, N. Y.

1st Lt. J. L. Watson, Ft. Belvoir, Va., to 463d AAF BU, Geiger Fld, Wash.

1st Lt. C. E. Knight, Buffalo, N. Y., to 1st Army Armd Forces Indctn Sta, Albany, N. Y.

1st Lt. L. W. Motzny, jr., Ft. Benning, Ga., to 2d Inf Div, Ft. Lewis, Wash.

1st Lt. D. H. Steinhoff, Ft. Dix, N. J., to Hq 11th Air Force, Harrisburg, Pa.

2nd Lt. G. L. Stewart, Ft. Dix, N. J., to 463d AAF BU, Geiger Fld, Wash.

SIGNALS CORPS

MAJ. GEN. H. C. INGLES, CSO

Col. S. S. Cerwin, Ft. Jackson, S. C., to ATCHD. Armed F. Staff Col., Norfolk, Va.

Lt. Col. E. F. Storm, Ft. Dix, N. J., to MDW, Ft. Belvoir, Va.

Lt. Col. M. R. Kuntz, Ft. Monmouth, N. J., to Hq Alaska, Comm, S., Seattle, Wash.

Maj. E. S. Landry, Wash., D. C., to Det. of Pat., Fitzsimons GH, Denver, Colo.

Maj. F. V. Diehl, Cp Polk, La., to Hq 4th Army, Ft. Sam Houston, Tex.

Maj. J. V. Fill, Ft. Dix, N. J., to Sig C Eng Lab, Ft. Monmouth, N. J.

Capt. F. D. Racy, Cp Beale, Calif., to Hq Ft. Monmouth, N. J.

Capt. C. A. Vitarius, Ft. Dix, N. J., to MDW, AWC, Wash., D. C.

Capt. C. G. Miller, Ft. Wadsworth, N. Y., to Alaska Comm System, Seattle, Wash.

Capt. E. A. Doran, Ft. Dix, N. J., to OC Sig O, Wash., D. C.

Capt. J. C. Huntley, Mitchel Fld, N. Y., to Hq Ft. Monmouth, N. J.

Capt. R. E. Rogers, Wash., D. C., to Hq, Ft. Monmouth, N. J.

1st Lt. A. F. Combs, Ft. Dix, N. J., to Hq Ft. Monmouth, N. J.

1st Lt. B. F. Jones, Ft. Monmouth, N. J., to 2d Army, 1321st ASU, Ft. Eustis, Va.

1st Lt. W. J. Lettire, Phoenixville, Pa., to Hq, Ft. Monmouth, N. J.

1st Lt. A. R. Mason, Ft. Dix, N. J., to Hq, Ft. Monmouth, N. J.

1st Lt. F. T. Quigley, Phoenixville, Pa., to Sig C Engr Lab, Ft. Monmouth, N. J.

1st Lt. B. Schleshinger, San Francisco, Calif., to 7th Sig Radar Maint Unit, Ft. Bliss, Tex.

1st Lt. . H. Stammreich, Ft. Dix, N. J., to Hq, Ft. Monmouth, N. J.

1st Lt. F. A. Stoutz, Ft. Bragg, N. C., to 2d Inf Div, Ft. Lewis, Wash.

1st Lt. W. Ward, San Francisco, to Alaska Comm System, Seattle, Wash.

1st Lt. E. De Keyser, Scott Fld, Ill., to 82d Abn Div, Ft. Bragg, N. C.

1st Lt. C. A. Klaver, Ft. Tilden, N. Y., to 1300th ASU NYPE, Brooklyn, N. Y.

1st Lt. P. J. Offer, Ft. Jackson, S. C., to 7th Army Milan Ars, Milan, Tenn.

ADJUTANT GENERAL'S DEPT.

MAJ. GEN. E. F. WITSELL, TAG

Lt. Col. C. S. Hannum, Ft. Dix, N. J., to Hq 7th Army, Atlanta, Ga.

Lt. Col. F. H. Stone, New Orleans, La., to Stu Det Hq MDW, Wash., D. C.

Lt. Col. J. F. Taylor, Atlanta, Ga., to 7th Army N. C. Mil Dist, Raleigh, N. C.

Lt. Col. G. W. Olds, Wash., D. C., to Hq 1st Army, Governors Is., N. Y.

Maj. J. J. Allen, New York, N. Y., to 1st Army Det. No. 1, Cp Kilmer, N. J.

Capt. J. C. Schiller, New York, N. Y., to Inf Sch, Ft. Benning, Ga.

Capt. S. H. Siegel, Ft. Meade, Md., to RTC, Ft. Jackson, S. C.

Capt. W. R. Cox, Columbus, Ohio, to A. G. Reg Records Off, Ft. Crook, Nebr.

Capt. G. R. Salyer, Carlisle Bks., Pa., to NOPE, New Orleans, La.

Capt. W. E. Slusser, Aberdeen, Md., to AGO, Wash., D. C.

Capt. H. J. Price, Cp Hood, Tex., to 4th

(Please turn to Page 383)

CLIMATE with a CAPITAL "C"

IN PENSACOLA our seasons change, but not too violently; winters are mild, not frigid; summers are warm, not hot; here rain and sun hit a happy medium, and nature is friendly.

Finest beaches on the Gulf of Mexico, waters of azure blue.

Whether you prefer quiet stream fishing or exciting strikes in the Gulf, vegetable or flower gardening, swimming or golf — Pensacola has SO MUCH to offer in varied attractions, modern facilities, hospitality, and reasonable living costs. We invite you to consider Pensacola for your future home.

Every type of outdoor sport, all year round ..at Pensacola!

For booklet write Municipal Advertising Board

PENSACOLA Florida
ON THE GULF OF MEXICO

NO COAXING NEEDED . . .

TO EAT THIS FOOD!

Children and adults, too, just naturally love Sealtest Ice Cream. And how fortunate that it is such a nourishing food. In addition to Vitamin "A" and calcium, Sealtest Ice Cream is rich in other vitamins, minerals and protein found in milk, and contains 10 important Amino acids. Our Government includes ice cream in one of the Basic-7 food groups.

Southern Dairies

Sealtest ICE CREAM

THE MEASURE OF QUALITY

Division of National Dairy Products Corporation

Tune in the Sealtest Village Store, starring Jack Haley, Thursday Evenings, NBC

SERVICE NEWS AND GOSSIP

Foreign Affairs—Increasing rather than diminishing participation in various phases of international military and naval cooperation by the Armed Forces of the United States is being planned by the Administration. To this end there will be sought at the next Congress various legislative authorities to continue and expand some of the military-diplomatic relationships which grew out of World War II. The policy of Inter-American defense, embracing both the British Dominion of Canada and our Latin-American neighbors from Mexico to Chile, will be carefully nurtured and developed with such assistance and cooperation as Congress will provide. Military aid to China likewise will be part of our policy to help bring about the "free and independent" China which Secretary of State Byrnes emphasized in his statement to the United Nations General Assembly last week-end as "essential to world peace." The third plank in our program of international military cooperation is the extension of our system of military missions to foreign countries. By these means the United States aims to strengthen our security and thus contribute to world peace. "It was our military weakness not our strength, that encouraged Axis aggression," Mr. Byrnes pointed out in his UN statement. As to China, it is so important a part in the program that President Truman thought it advisable this week to reiterate our position and to remind the Chinese themselves that their civil war threatens the peace of the world and must be brought to an end. Despite the "unpropitious internal situation" there, the President has decided to keep his personal representative, General of the Army George C. Marshall, there until the Chinese situation is cleared up. "We shall continue," the President said, "our positive and realistic policy toward China which is based on full respect for her national soverignty and on our traditional friendship for the Chinese people and is designed to promote international peace."

In his statement to the General Assembly, Secretary Byrnes set the pace for the other nations by announcing the numbers and categories and locations of our troops. We have, he said, 550,000 troops outside of American territory, mostly in Germany, Japan and the Japanese islands, Korea, Austria, and Venizia Giulia. Outside of the occupation areas most of these are supply or administrative personnel. In his breakdown he revealed the following figures: 96,000 military personnel in the Philippines of which only 30,000 are combat forces including 17,000 Philippine Scouts; 19,000 troops in China, 15,000 of which are combat and about one-half of which are under orders to return to the states; 1,500 in Panama exclusive of the Canal Zone. This completes our roster of combat personnel overseas, he said, adding that we have other military personnel as follows: 600 men in Iceland all due to be withdrawn by early April, 1947; and 300 in the Azores. Mr. Byrnes concluded his remarks with the statement that "We want to stop the race for armaments and we want to stop the race for power."

The United Nations General Assembly in its closing days voted 54-0 in favor of a reduction of armament, but the degree of reduction was not stated, nor the means of attaining it. In the terms of that resolution, too, use of the atomic bomb itself is to be ended, and there is to be an unhampered international inspection system to verify the fact that the bomb is not being secretly produced and that the reduction (degree undetermined) in weapons and installations is being carried out—but the means by which these processes are to be carried out are yet to be decided upon, not only in the UN's own Atomic Energy Commission where discord already is apparent, but then by the Security Council. Right there is the potential halting point. Right there is the spot where within the year there have been nine arbitrarily imposed vetoes. Certainly it is an impressive thing to have all 54 nations (Siam was not a member when the vote was taken) in full agreement upon such a principle: there remains a need for a mere five nations, (but these are the five holding veto powers) to come to agreement upon a few practices. The first test is already being made upon the report of the Atomic Energy Commission, before which has been laid the American plan which calls for no-veto in the United Nations' absolute control of this potent force. The next test will come upon the issue of an international troop census, with each nation giving full and frank accounting of the numbers of its military, of all categories, not only abroad but at home: it must be remembered that while all other recommendations by the General Assembly's committees won support in the Assembly, this troop-census recommendation was sent back to committee for rewording, and ultimately was shelved.

Recapitulation of results at the New York sessions of the Assembly and the Big Four includes, besides the items mentioned, the following: (1) approval of drafts of treaties which Italy, Romania, Bulgaria, Hungary and Finland are expected to sign in Paris in February, and agreement to take up the German and Austrian treaties at Moscow in March. (2) recommendation of individual nations' withdrawal from Madrid of their chief diplomatic officials—not a break in relations but a gesture of disapproval of the Franco government. (3) setting-up of a ten-member trusteeship council for the old League of Nations mandates, to further the mandates' more rapid march toward independence. (4) recommendation of a "sparing" use of the veto, this being as far as the Assembly got in a hopeless campaign to eliminate the veto altogether. (5) a call for a 1947 conference upon the free gathering and circulation of objective news reports—whose bearing on the March meeting in Moscow is interesting. (6) establishment of an International Refugee Organization, voted against by Russia, Poland and Yugoslavia on the ground that the refugees should be repatriated by force if necessary, but recognized by other nations as a necessary replacement for UNRRA. (7) selection at last of a permanent UN site in New York—donated, incidentally, by the Rockefeller family—requiring, of course, several years for building. (8) admission to membership of Sweden, Iceland, Afghanistan and Siam, bringing the United Nations total to 55.

Supplementing other items in the five treaty drafts referred to is the announced authorization of troop strengths for Italy (275,000 plus 22,500 naval personnel, against a 1930 total of 413,000), Romania (133,000 plus 5,000 naval personnel, against a former 260,000), Hungary (70,000, against 70,000, unchanged), Finland (37,500 plus 4,500 naval, against 25,000) and Bulgaria (62,000 plus 3,500, against a former 33,000). Finland and Bulgaria, it is observed, are given larger establishments than formerly, which is a singular approach toward the arms-reduction sought for the nations generally, but a reminder that these treaty-drafts were the fruit of compromises and concessions.

The Military Staffs Committee of the Security Council, whose deliberations have been entirely secret up to now, has issued the first of its communiques. It hardly "tells all," stating only that the committee agrees unanimously upon a draft of the "principles which are to govern the purpose" of making armed forces available to the Security Council. The principles are not enumerated, however, nor is there any public guidance as yet on the size or character of the elements which are to compose the international police force, nor on how the air, ground, and sea components of such a force would be selected. The cautious wording of the communique again reminds us that there is a difference between unanimity on principles and unanimity on practices.

Guarded references to the continuing diplomatic negotiations between American and Filipino authorities make it appear that large changes in our military base set-up in the Philippines are imminent. It long has been apparent that the Army will reduce its use of Manila waterfront facilities just as rapidly as possible, partly to meet the natural wishes of Manila, partly because the war-time needs of storage and transport space exist only until the mountain of accumulated supplies can be disposed of. The mere presence of those now-unnecessary supplies, and of the service troops required to guard and maintain them, has been a cause of friction, not nearly so serious as alleged but in any degree undesirable. Certainly Army needs in Manila itself will soon be reduced very sharply. It also is likely that Navy use of the old installations adjacent to the shallow waters of Manila Bay will be reduced; deeper water is available further south. Air bases' location is also subject to reconsideration, now being given by the negotiators.

Field Artillery—The last Field Artillery Officer Candidate Class graduated its 21 members 12 Dec., in a ceremony at Post Chapel No. 3, Fort Sill, Okla. Maj. Gen. Clift Andrus, commandant, the Artillery School, presented the diplomas to the men and Maj. Erwin Fredricks, a graduate of the first class, administered the oath of office to members of this 179th graduating class.

In the future men appointed to take the Officer Candidate Course will be sent to Ft. Benning, Ga., where they will receive six months of training, which will not stress any particular branch of service. They will be sent to the branch school of their choice for further training. Graduates who choose Artillery will be sent to Ft. Sill for three months.

The ceremony 12 Dec. began as the class marched to the chapel behind the 97th Army Ground Forces Band. Col. John A. McFarland, Commanding Officer, Artillery School Detachments, took charge and introduced Col. William C. Bullock, Director of the Department of Observation, who gave the graduating address. Following the address Maj. Erwin C. Fredricks, Director of Gunnery for the Officer Candidate School, administered the oath of office to the new officers. General Andrus presented the diplomas and Capt. Edward Curran, Catholic Chaplain, gave the benediction. The ceremony ended when General Andrus pinned the bars on 2nd Lt. Corydon B. Dunham, jr., honor student of the class, as the band played "The Caisson Song."

The 21 members of the Class were: Wallace D. Bucher, Murray A. Cantor, Colin D. Ciley, jr., Leonard J. Cleary, Theodore M. Collier, Charles E. Davis, Corydon D. Dunham, jr., Meyer T. Durlofsky, William C. Evans, Robert M. Gunner, Jack L. Hudson, Glenn Humphrey, James F. Keegan, Albert Ketler, Larry H. Larimer, Edward D. Larson, Robert M. Matesic, John C. Murphy, Joseph C. Rodgers, Kenneth Thomason, and Scott J. Winters.

Infantry Center—General Omar Bradley, Veteran's Administrator and often described as the "soldier's General," is spending a quiet week's vacation at Fort Benning. The 53-year-old four-star General and his wife arrived here from Savannah by private automobile to "do a little fishing and hunting," and the visit is entirely unofficial. He also expects to renew his acquaintance with some of the many friends he made in the Columbus and Fort Benning areas while commandant of the Infantry School.

Brig. Gen. Benjamin F. Caffey, former commanding general of Fort Benning and at present commander of the 25th Combat Team at the post, has been transferred to Japan for duty with the occupation forces, effective about 1 Jan. 1947.

Mrs. Caffey, the former Miss Louise Battle, daughter of the late Dr. and Mrs. G. B. Battle of Columbus, said Tuesday she would follow her husband to Japan as soon as transportation is provided.

Maj. John S. Conlin, who reported for duty at Lawson Field last August, has been appointed to the faculty of the University of Utah as an Air ROTC instructor.

Monday morning Officer Candidate Class No. 544 graduated. One hundred proud young men walked up on the platform of Theatre No. 11 and received their commissions from Col. Irvine C. Scudder, thus ending seventeen weeks of constant tension, never ending labor, and character molding discipline.

Bureau of Supplies and Accounts—With the completion of the third major takeover of Ship's Service Stores by the U. S. Navy Ship's Store Office, a field activity of the Bureau of Supplies and Accounts, the organization has now assumed responsibility for 116 Ship's Service Stores in the First, Third, Fourth, Fifth, Sixth, Seventh, Eighth, and Ninth Naval Districts, and the Potomac and Severn River Naval Commands.

It is planned to take over stores in the Eleventh, Twelfth, and Thirteenth Naval Districts on 1 Jan. 1947, and those outside the continental limits in February. Central procurement by the merchandise group of the U. S. Navy Ship's Store Office has been progressing rapidly, and substantial savings are reported as the result of direct purchasing in large quantities.

Supply Officers who have been graduated from the class in Ship's Service Store Management at NSCS, Bayonne, N. J., have been assigned billets as Ship's Service Store Officers, and classes are continuing through January 1947 in order to train additional officers required to complete the consolidation and the takeover program.

Ordnance Department—Recent delivery of a tank weighing about 60 tons and a 63½-ton gun motor carriage to Ordnance by the Chrysler Corporation does not indicate, as some have suggested, that the Army is concentrating on bigness in its combat vehicles. Size and firepower of these two are in striking contrast to those of similar weapons used during the war, but the two characteristics are but incidental to the primary interests of Army Ordnance's design engineers at present.

The gun motor carriage was designed to carry either a 240 mm. howitzer or an 8-inch gun, while the 60-ton tank is armed with a 90 mm. gun. Both have heavier armor than wartime vehicles, and both a top speed of about 20 miles an hour.

To the Ordnance Department and the Army, tank components are of more immediate concern; that is, the concentration of research and development effort is on perfection of components. Generally speaking, a tank may be made larger and heavier by addition of thicker armor; and more firepower can be given by adopting larger guns—the greater weight being taken care of by longer and wider tracks.

It is, however, in the engines, the cooling systems, ammunition stowage, transmissions, intrumentation—the components that, perfected and perfectly coordinated,

make for highest efficiency—that Ordnance's postwar research and development programs are centered. Some striking advances have already been made, but much remains to be done before the Army may boast of having achieved the optimum in quality and performance of the components, individually and in combination.

Marine Corps—A separate Operation and Engagement Star has been authorized by CNO for the Tinian operation. Heretofore, only one battle star had been authorized for the Marianas campaign, of which the battles for Saipan and Tinian had been a part. Participants in the Tinian operation, which began 24 July and terminated 1 Aug., 1944, included the Second and Fourth Marine Divisions, plus Fifth Amphibious Corps.

Marine Corps personnel who saw service in Germany or Austria-Hungary between 12 Nov. 1918 and 11 July 1923 are entitled to the Army of Occupation Medal for World War I, and may submit applications to the Commandant. Applications should contain name, rank, serial number, current address, and the designation of the organization attached to or serving with during the period covered by the medal.

Members of the Organized Marine Corps Reserve, Class II, will be extended post exchange privileges, upon presentation of proper identification, at all Marine Corps post exchanges. F

National Guard—Federal recognition of five additional general officers of the National Guard was announced 21 Dec. by the War Department. They are: Maj. Gen. William H. Sands, Norfolk, Va., who will command the 29th Division; Brig. Gen. Otto E. Sandman, Sockton, Calif., who will command the division artillery of the 52d Division; Brig. Gen. David P. Hardy, San Francisco, Calif., who will command the 112th Antiaircraft Artillery Brigade; Maj. Gen. Edward J. Stackpole, Harrisburg, Pa., who will command the 28th Infantry Division, and Brig. Gen. Daniel B. Stickler, Lancaster, Pa., who will be Assistant Division Commander of the 28th Infantry Division.

Maj. Gen. Butler B. Miltonberger, Chief of the National Guard Bureau, also has announced that Capt. Walter Hensel, Headquarters 50th Armored Division, is the 1,000th National Guard officer to receive federal recognition. Captain Hensel lives in Sea Girt, N. J.

Following the recent publication of plans for the reestablishment of the New York National Guard, Lt. Gen. Hugh A. Drum has announced the following appointments of commanding officers for the major units to be organized initially:

27th Infantry Division, Hq. Albany—Division Commander, Maj. Gen. Bernard W. Kearney; Assistant Division Commander, Brig. Gen. Ronald C. Brock.

42d Infantry Division—Hq. New York City—Division Commander, Maj. Gen. Cornelius W. Wickersham; Assistant Division Commander, Brig. Gen. Brendan A. Burns; Division Artillery Commander, Brig. Gen. Charles E. Saltzman.

105th AAA Brigade, Hq. Buffalo—Brigade Commander, Brig. Gen. Karl F. Hausauer.

Navy Nurse Corps—Officer status held by members of the Navy Nurse Corps entitles them, along with other officers, to have retirement board proceedings reviewed by Naval Retiring Boards, according to the Judge Advocate General of the Navy.

In a case involving the release of a nurse whose disability was ruled "not as a result of an incident of service," the JAG cited a provision of law calling for reviews of retiring board findings if so requested by any officer of the "Army, Navy, Marine Corps, or Coast Guard, or any of their respective components."

The JAG also ruled that a Reserve nurse who served in World War I is eligible for retirement benefits authorized members of the "Navy Nurse Corps."

A call for the immediate return to active duty of two hundred volunteer members of the Nurse Corps, U. S. Naval Reserve, has been issued by the Bureau of Medicine and Surgery, according to announcement from Washington, D. C., by the Surgeon General of the Navy, Rear Adm. C. A. Swanson (MC) USN.

These volunteers will obligate themselves for not less than a year of duty, and they will be assigned at once to service in Naval hospitals throughout the country. They will return to active duty with the same rank as that held by them when they went on inactive service. All members of the Naval Reserve Nurse Corps interested in returning to active duty for this period of a year or more are urged to apply to the Superintendent of the Nurse Corps, Bureau of Medicine and Surgery, Navy Department, Washington 25, D. C.

With the promotion of Lt. Comdr. Beulah Ann Buchanan to the rank of Commander in the Nurse Corps, the number of nurses on active duty holding the rank has now reached five.

Finance Department—Col. Eugene M. Foster, Assistant Chief of Finance, U. S. Army, returned to Washington last week after visiting the Army Finance Center, St. Louis, Mo., to discuss final plans for the movement of the Office of Dependency Benefits to St. Louis, Mo. from Newark, N. J. The entire Office of Dependency Benefits move will be completed by the middle of January when the ODB as such will be inactivated and its functions transferred to the Army Finance Center which will then become the largest Finance Department field installation under the Chief of Finance.

Maj. William R. Hickman, Chief, Finance Training Branch, Administrative Management Division, OCF, returned to Washington after attending a training conference at Ft. Sill, Oklahoma.

Capt. Joseph R. Svec, Finance Department, Deputy Finance Officer to Col. Carl Witcher, FOUSA, Washington, D. C., received orders transferring him to the Panama Canal Department last week. Major Paul L. Williams, FD, also of the FOUSA, Washington, D. C., was transferred to Manila in the Philippine Islands last week.

Col. Frank G. Fraser, Finance Officer, U. S. Military Academy, West Point, New York, visited the Office of the Chief of Finance last week.

Col. John F. Connell was placed on the retired list recently after 29 years of service.

Bureau of Naval Personnel—Chief among changes of assignment ordered in the past week are those for officers recently selected for promotion to Rear Admiral. Although many already fill flag officer billets, others must be transferred to new assignments commensurate with the higher rank for which they were chosen. Among such transfers ordered this week are:

Capt. Robert P. McConnell to be Commander Carrier Division 15, Capt. George C. Crawford to be Commander Cruiser Division 13, Capt. Evander W. Sylvester to be Commander of the Puget Sound Naval Shipyard, and Commo. Henry R. Oster and Capt. Charles A. Nicholson to be Assistant Chiefs of the Bureau of Aeronautics, where both are now stationed.

On completion of each change of assignment, promotion to flag rank will be effected.

Medical Department—Brig. Gen. Raymond W. Bliss, War Department Deputy Surgeon General, is making his first post-war inspection of European Theater medical service. He arrived in Frankfurt from Washington, D. C., and was greeted by Brig. Gen. Edward A. Noyes, Theater Chief Surgeon.

After spending several days in Frankfurt in consultation with Theater medical division chiefs, General Bliss started an intensive tour of U. S. medical installations in occupied and liberated countries, including the installations of the Mediterranean Theater.

At the conclusion of this tour, General Bliss expects to make a visit to the Soviet Union, in behalf of the Army Medical Department and of civilian medicine in the United States. He is especially interested in observing Russian methods in providing prosthetic devices for amputees.

Army Chaplains Corps—The number of services held by chaplains of the three major faiths, Protestant, Catholic, and Jewish, from December 1941 through August 1945 was compiled this week by the office of the Chief of Chaplains.

The total attendance during the war years is a composite picture of response to spiritual leadership. It does not follow that all military personnel attended worship services. One man may have attended one or more times while others never availed themselves of the opportunity to worship.

Total Religious Services, 5,436,296, with 329,058,648 attendance.
Communion and Sacramental Participants, 42,501,315.
Hospital Visits, 3,496,716, seeing 71,311,680 persons.
Guardhouse Visits, 536,539; seeing 4,434,774 persons.
Pastoral Activities (Army), 32,350,251, with 289,180,769 attendance.
Civilian Communities—Activities, 1,199,882, with 95,583,818 attendance.
Grand total, 43,019,684 contact occasions with a total attendance of 832,071,004

U. S. Naval Academy—Orders were dispatched this week directing the execution of the previously-announced change of assignment in which Vice Adm. Aubrey W. Fitch is to be succeeded by Rear Adm. James L. Holloway, jr., as Superintendent of the Naval Academy and Commandant of the Severn River Naval Command. Admiral Fitch is the only Naval officer on active duty who is over the retirement age of 62. If original plans are carried out, Admiral Holloway will relieve Admiral Fitch around the middle of January.

The selection of a site in the Sandy Point area for a Naval Academy airfield has met some opposition from Anne Arundel County land-owners. The Board of County Commissioners approved the Navy proposal recently by a 6-to-2 vote, but consented to hold public hearings to permit delegations to voice their protests.

Signal Corps—Transfer of the facilities and equipment of the Philadelphia Signal Depot to the Baltimore Sub-Depot at Middle River, Md., has been under way for several weeks, and about 450 tons of material are now arriving daily at the new installation. Approximately 200 persons are currently employed at the Sub-Depot which is under the control and administration of the Holabird Signal Depot in Baltimore.

Membership in the Army Signal Association, of which Brig. Gen. David Sarnoff is President, has exceeded the 5,000 mark and many local chapters are being formed throughout the country.

For his contributions to the production of scientific films by the Army Pictorial Service, Maj. Ralph W. Nelson, Signal Corps, has been awarded the Legion of Merit.

Army Orders

(*Continued from Page* 381)

Army, Ft. Sill, Okla.

Capt. K. G. Witt, Carlisle Bks, Pa., to 7th Army Tenn Mil Dist, Nashville, Tenn.

1st Lt. J. J. Slattery, Greensboro, N. C., to 104th AAF BU, Mitchel Fld, N. Y.

1st Lt. E. E. Smith, Aberdeen Pr Gr, Md., to 2d Army Rctg Dist, Balto., Md.

INSPECTOR GENERAL'S DEPT.
LT. GEN. D. I. SULTAN, TIG

Col. W. H. Shutleff, jr., Wash., D. C., to Hq 1st Army, Governors Is., N. Y.

Maj. R. R. Hall, Ft. Benning, Ga., to IGDRP, Hq, 5th Army, Chicago, Ill.

JUDGE ADVOCATE GENERAL'S DEPT.
MAJ. GEN. T. H. GREEN, TJAG

Col. J. E. Godwin, Ft. Sam Houston, Tex., to Armed F. Staff Coll, Norfolk, Va.

Lt. Col. C. F. Cordes, Cambridge, Mass., to 1st Army, Governors Is., N. Y.

Lt. Col. R. E. Jordan, Cambridge, Mass., to 1st Army, Governors Is., N. Y.

QUARTERMASTER CORPS
MAJ. GEN. T. B. LARKIN, QMG

Col. E. L. Wilson, Cp Lee, Va., to OQMG, Wash., D. C.

Lt. Col. E. A. Evenson, Chicago, Ill., to 5th Army, Ft. Omaha, Nebr.

Lt. Col. W. G. Ramsey, Ft. Dix, N. J., to Hq 1st Army, Governors Is., N. Y.

Maj. W. E. Dildine, Cp Lee, Va., to O.Q.M. G., Wash., D. C.

Maj. F. D. Gordon, Cp Lee, Va., to 2d Army, Ft. Hayes, Ohio.

Capt. R. E. Burquist, Cp Beale, Calif., to RTC, Ft. Ord, Calif.

Capt. J. V. D'Esposito, Ft. Dix, N. J., to 1st Army Sta Comp, Pine Cp, N. Y.

Capt. H. Deutsch, Boston, Mass., to 1st Army NYPE, Brooklyn, N. Y.

Capt. S. L. Callihan, Ogden, Utah, to Stockton, Gen Dep US Army, Stockton, Calif.

Capt. H. A. Barnes, Alexandria, Va., to OQMG, Wash., D. C.

Capt. W. E. Powell, Alexandria, Va., to OQMG, Wash., D. C.

Capt. T. W. Simmons, Ft. Bragg, N. C., to 7th Army Mil Dist, Nashville, Tenn.

Capt. C. A. Laubach, jr., Santa Fe, N. Mex., to Army & Navy GH, Hot Springs, Ark.

Capt. W. L. Whitaker, Cp Hood, Tex., to 4th Army Det, Texarkana, Tex.

Capt. J. T. Wallance, NYC, to QM Dep, Chicago, Ill.

Capt. C. D. Jeffreys, Savannah, Ga., to 5th Army Task Force Frost, Cp McCoy, Wis.

Capt. J. L. Patterson, Ft. Dix, N. J., to Gen Dep, Stockton, Calif.

Capt. J. G. Rasmussen, San Antonio, Tex., to 1st Army Rctg Sv Det No. 3, Newark, N. J.

1st Lt. S. O. Stooksberry, Swannanoa, N. C., to 7th Army, S. C. Mil Dist, Columbia, S. C.

1st Lt. M. L. Andrews, Cp Beale, Calif., to Ft. Ord, Calif.

1st Lt. V. T. Gilpin, Ft. Meade, Md., to OC of S, Wash., D. C.

1st Lt. P. J. LaFaille, jr., Cp Langdon, N. H., to 1st Army Elmira QM Dep, Horseheads, N. Y.

2nd Lt. J. Malizola, Ogden, Utah, to Stockton Gen Dep, Stockton, Calif.

FINANCE DEPARTMENT
MAJ. GEN. W. H. KASTEN, C OF F

Lt. Col. J. H. Savage, Wash., D. C., to San Antonio Reg O, Ft. Sam Houston, Tex.

Lt. Col. E. A. Muth, Brooklyn, N. Y., to Rpl Pl, Army Fin Cent, OCF, St. Louis, Mo.

Lt. Col. R. R. White, St. Louis, to 2d Army, Ft. Eustis, Va.

Maj. O. E. Skofield, Ft. Dix, N. J., to FD Repl Pl Army Fin Cen OCF, St. Louis, Mo.

Maj. H. L. Oldenburg, Newark, N. J., to Reg Off, Army Aud Agcy, Chicago, Ill.

Maj. A. C. Nelson, St. Louis, to Fin Office, Atlanta, Ga.

Maj. J. C. Shea, St. Louis to Hq 6th Army, San Francisco, Calif.

Maj. C. W. Snoad, St. Louis, Mo., to 1st Army, Ft. Hancock, N. Y.

Capt. W. E. Deaux, St. Louis, Mo., to 2nd Army, Ft. Knox, Ky.

1st Lt. J. M. Scott, St. Louis, to Pratt GH, Coral Gables, Fla.

1st Lt. J. H. Sackett, Ft. Sam Houston, Tex., to 4th Army Det NOPE, New Orleans, La.

1st Lt. J. G. Shook, St. Louis, to 6th Army, Ft. Lewis, Wash.

2nd Lt. R. L. Beaudoin, St. Louis, to 7th Army, Ft. Barrancas, Fla.

2nd Lt. L. J. Neifer, St. Louis, to 6th Army, Cp McQuaide, Calif.

2nd Lt. W. A. Robertson, St. Louis, to 1st Army, Ft. H. G. Wright, N. Y.

(*Please turn to Next Page*)

Army Orders

(Continued from Preceding Page)

2nd Lt. D. O. Wright, St. Louis, to 7th Army, Ft. Benning, Ga.

MEDICAL DEPARTMENT

MAJ. GEN. N. T. KIRK, SG

Medical Corps

Col. C. T. Young, Cp Atterbury, Ind., to AMC, Wash., D. C.

Col. C. W. Salley, Oak Ridge, Tenn., to Letterman GH, San Francisco, Calif.

Col. P. S. Fancher, Brooke AMC, Tex., to Percy Jones GH, Battle Creek, Mich.

Col. A. B. Ramsay, Ft. Sam Houston, Tex., to Oliver GH, Augusta, Ga.

Lt. Col. C. K. Morris, Ft. Sam Houston, Tex., to 104th AAF BU, Mitchel Fld, LI, N. Y.

Lt. Col. L. O. Crago, Ft. Sam Houston, Tex., to 3543d AAF BU, San Antonio Tex.

Lt. Col. T. R. Preston, Waltham, Mass., to Med Div, Edgewood Ars, Md.

Maj. W. H. Stubenrauch, Ft. Dix, N. J., to 200th Hosp Ship Compl, NYPE, Brooklyn, N. Y.

Maj. R. N. Outwin, Wash., D. C., to 1st Army, Cp Kilmer, N. J.

Maj. E. Capellari, Cp Atterbury, Ind., to Percy Jones GH, Battle Creek, Mich.

Maj. R. R. Chapman, Wash., D. C., to 1st Army RSH, to 1st Army RSH, Ft. Jay, N. Y.

Capt. L. A. Brotchner, Ft. Dix, N. J., to 5th Army Reg Sta Hosp, Ft. Sheridan, Ill.

Capt. A. J. Leonard, Cp Atterbury, Ind., to Pratt GH, Coral Gables, Fla.

Capt. B. R. Swan, San Francisco, Calif., to 6th Army Sierra Ord Dep, Herlong, Calif.

Capt. R. J. Tille, Santa Fe, N. Mex. to 1st AAF BU, Bolling Fld, D. C.

Capt. B. W. Lawrence, Wash., D. C., to 1st Army, Ft. Jay, N. Y.

Capt. B. K. Bradford, Staten Is., N. Y., to 1102d AAF BU, Ft. Totten, N. Y.

Capt. T. L. Chiffelle, Santa Fe, N. Mex., to 7th Army, Ft. Bragg, N. C.

Capt. C. B. Bray, Staten Is., N. Y. to 7th Army, Ft. Bragg, N. C.

Capt. R. J. Furie, Ft. Dix., N. J., to Murphy GH Waltham, Mass.

Capt. F. W. Hare, Ft. Meade, Md., to RTC, Ft. Jackson, S. C.

Capt. F. Myer, Santa Fe, N. Mex., to Fitzsimons GH, Denver, Colo.

Capt. L. Britton, Staten Is., N. Y., to 1st Army US Disc Bks, Greenhaven, N. Y.

Capt. J. T. Murphy, Oak Ridge, Tenn., 6th Army, Ft. Ord, Calif.

Capt. M. J. Robertson, Battle Creek, Mich., to Oliver GH, Augusta, Ga.

Capt. A. B. Shapiro, Battle Creek Mich., to 1st Army, Ft. Dix. N. J.

Capt. F. C. Link, Cp Atterbury, Ind., to AMC, Wash., D. C.

Capt. S. R. Lewis, Cp Atterbury, Ind., to Valley Forge GH, Phoenixville, Pa.

Capt. H. H. Mulder, Portland, Ore., to 6th Army, Cp Cooke, Calif.

Capt. W. L. Pickhardt, Ft. Sam Houston, Tex., to Madigan GH, Ft. Lewis, Wash.

Capt. S. L. Gernstetter, Waltham, Mass., to 1st Army Sta Hosp, Cp Kilmer, N. J.

Capt. R. K. Purves, Santa Fe, N. Mex., to Army and Navy GH, Hot Springs, Ark.

Capt. W. A. Roy, Ft. Lawton, Wash., to Letterman GH, San Francisco, Calif.

Capt. L. J. Koenig, Ft. Mason, Calif., to 6th Army, Ft. Ord, Calif.

Capt. J. J. Newman, Cp Beale, Calif., to Tilton GH, Ft. Dix, N. J.

Capt. F. Soldow, Santa Fe, N. Mex., to Fitzsimmons GH, Denver, Colo.

Capt. J. H. Spearing, Ft. Riley, Kans., to RTC, Ft. Ord, Calif.

Capt. E. A. Hill, Ft. Meade, Md., to RTC, Ft. Jackson, S. C.

Capt. R. B. Buckley, Cp Atterbury, Ind., to Pratt GH, Coral Gables, Fla.

Capt. W. R. Bliss, Cp Atterbury, Ind., to Army & Navy GH, Hot Springs, Ark.

Capt. W. R. Coutant, Ft. Riley, Kans., to RTC, Ft. Ord, Calif.

Capt. B. E. Flaherty, Ft. Dix, N. J., to Letterman GH, San Francisco, Calif.

Capt. L. E. Morrison, II, Cp Atterbury, Ind., to Tilton GH, Ft. Dix, N. J.

1st Lt. S. C. Gallup, Ft. Lewis, Wash., to 6th Army SFPE, Ft. Mason, Calif.

1st Lt. P. B. Lambrecht, Phoenixville, Pa., to 7th Army, Ft. Benning, Ga.

1st Lt. J. G. Meyer, San Francisco, Calif., to 6th Army SFPE, Ft. Mason, Calif.

1st Lt. D. E. Haft, Ft. Oglethorpe, Ga., to 2nd Army, Cp Campbell, Ky.

1st Lt. M. H. Mosley, Oak Ridge, Tenn., to Pratt G. H., Coral Gables, Fla.

1st Lt. A. L. Frankel, Dayton, Ohio, to 7th Army, Ft. Barrancas, Fla.

1st Lt. M. V. Atchison, Ft. Sam Houtson, Tex., to Wm. Beaumont GH, El Paso, Tex.

1st Lt. W. E. Doggett, Augusta, Ga., to 7th Army Sta Comp, Ft. Bragg, N. C.

1st Lt. W. B. Carter, Staten Is., N. Y., to Percy Jones GH, Battle Creek, Mich.

1st Lt. E. D. Henderson, Staten Is., N. Y., to Valley Forge GH, Phoenixville, Pa.

1st Lt. D. J. Bradley, Ft. Sam Houston, Tex., to 6th Army, Cp Beale, Calif.

1st Lt. I. I. Langley, Ft. Lewis, Wash., to 6th Army SFPE, Ft. Mason, Calif.

1st Lt. E. W. Woods, New Orleans, La., to SFPE, Cp Stoneman, Calif.

1st Lt. S. Mishkin, Augusta, Ga., to 2nd Army Sta Comp, Cp Storey, Va.

1st Lt. W. W. McCrory, Wash., D. C., to 7th Army, Ft. Bragg, N. C.

1st Lt. A. J. Stojowski, Cp Atterbury, Ind., to Pratt GH, Coral Gables, Fla.

1st Lt. S. Cytryn, Ft. Dix, N. J., to 2nd Army Sta Comp, Ft. Eustis, Va.

1st Lt. D. F. Jarvis, Ft. Sheridan, Ill., to 5th Army Gen Disp, St. Louis, Mo.

1st Lt. R. W. Taylor, jr., Ft. Lewis, Wash., to 6th Army, SFPE, Ft. Mason, Calif.

1st Lt. R. D. Tebbet, Ft. Sam Houston, Tex., to AGF Bd. No. 2, Ft. Knox, Ky.

1st Lt. J. P. Whittle, San Francisco, Calif., to 6th Army SFPE, Ft. Mason, Calif.

1st Lt. P. A. Gold, Wadsworth, Kans., to Valley Forge GH, Phoenixville, Pa.

1st Lt. R. L. Raphael, Dayton, Ohio, to 7th Army Ord Dep, Milan, Tenn.

1st Lt. N. D. Stevens, Pasadena, Calif., to 6th Army SFPE, Ft. Mason, Calif.

1st Lt. A. E. Posthuma, Ft. Sam Houston, Tex., to 9222d Hosp. S. Compl., NOPE, New Orleans, La.

1st Lt. L. G. La Palme, Washington, D. C., to Murphy GH, Waltham, Mass.

1st Lt. R. N. Zabarenko, Wash., D. C., to 2nd Army Sta Comp, Ft. Eustis, Va.

1st Lt. R. Harris, Wash., D. C., to 2nd Army Sta Comp, Carlisle Bks., Pa.

1st Lt. R. E. Buckmaster, Cp Atterbury, Ind., to AMC, Wash., D. C.

1st Lt. J. F. Weper, Tucson, Ariz., to Vet. Adm. Hosp., Phoenix, Ariz.

1st Lt. R. V. Horan, Staten Is., N. Y., to 7th Army, Ft. Bragg, N. C.

1st Lt. W. E. Miller, Kansas City, Mo., to 5th Army, Cp McCoy, Wis.

1st Lt. G. R. Foster, Cp Atterbury, Ind., to Pratt GH, Coral Gables, Fla.

1st Lt. R. M. Gluckman, Ft. Sam Houston, Tex., to Madigan GH, Tacoma, Wash.

1st Lt. R. L. Moore, Staten Is., N. Y., to 1st Army, Cp Kilmer, N. J.

1st Lt. S. B. Morgenlander, Augusta, Ga., to 2nd Army, New Cumberland Gen Dep, Pa.

1st Lt. F. T. Oates, Ft. McPherson, Ga., to 7th Army, Ft. Benning, Ga.

1st Lt. G. M. Nunez, Ft. Lewis, Wash., to 6th Army Reg Sta Hosp, Ft. Ord, Calif.

1st Lt. C. L. Ruffin, Ft. Oglethorpe, Ga., to 7th Army, Ft. Benning, Ga.

1st Lt. A. M. Hofstetter, Staten Is., N. Y., to USMA, West Point, N. Y.

1st Lt. M. Leeb, Cp Atterbury, Ind., to Wm. Beaumont GH, El Paso, Tex.

Lt. J. V. Bolger, Wash., D. C., to 1st Army, Ft. Monmouth, N. J.

1st Lt. G. S. Hankins, Ft. Dix, N. J., to 7th Army, Ft. McClellan, Ala.

1st Lt. J. G. McConahy, Phoenixville, Pa., to Hosp Tr Unit, Cp Kilmer, N. J.

1st Lt. R. F. Horseman, Santa Fe, N. Mex., to 6th Army Post Oper Co., Ft. Ord, Calif.

1st Lt. J. T. Tucker, Ft. Sam Houston, Tex., to Army and Navy GH, Hot Springs, Ark.

1st Lt. J. Shumacher, Ft. Lawton, Wash., to MDW Army Area Reg Sta H, Ft. Belvoir, Va.

1st Lt. S. E. Krasnow, Ft. Sam Houston, Tex., to Army and Navy GH, Hot Springs, Ark.

1st Lt. W. H. Parsons, Phoenixville, Pa., to 7th Army, Cp Gordon, Ga.

1st Lt. P. Cutler, Tacoma, Wash., to 2nd Army Reg Sta Hosp, Ft. Meade, Md.

1st Lt. R. Holder, Ft. Sam Houston, Tex., to 1st Army USA Gen Disp, New York, N. Y.

1st Lt. R. V. Chester, San Francisco, Calif., to 6th Army Post Opr Co, Ft. Ord, Calif.

1st Lt. A. N. Wisley, Oklahoma City, Okla., to Percy Jones GH, Battle Creek, Mich.

1st Lt. H. J. Manning, Ft. Dix., N. J., to 1st Army Sta Hosp, Cp Kilmer, N. J.

1st Lt. D. H. Adler, Staten Is., N. Y., to Murphy GH, Waltham, Mass.

1st Lt. P. K. Birtch, Staten Is., N. Y., to 7th Army, Ft. Benning, Ga.

1st Lt. I. A. Breckler, Ft. Sam Houston, Tex., to Med Div, Edgewood Ars, Md.

1st Lt. W. Chamberlain, Newington, Conn., to Veterans' Adm Reg Office, Providence, R. I.

1st Lt. E. M. Daniels, Bedford, Mass., to Cushing Veterans' Adm Hosp, Framingham, Mass.

1st Lt. J. W. Dykens, Bedford, Mass., to Cushing Veterans' Adm Hosp, Framingham, Mass.

1st Lt. J. T. Everett, Staten Is., N. Y., to 6th Army, Ft. Ord, Calif.

1st Lt. L. M. Golub, Bedford, Mass., to Cushing Veterans' Adm Hosp, Framingham, Mass.

1st Lt. W. W. Kersey, jr., Staten Is., N. Y., to Pratt GH, Coral Gables, Fla.

1st Lt. W. Land, Bedford, Mass., to Cushing Veterans' Adm Hosp, Framingham, Mass.

1st Lt. M. F. Levitt, Staten Is., N. Y., to 1st Army, Ft. Jay, N. Y.

1st Lt. H. R. Mann, jr., Staten Is., N. Y., to Valley Forge GH, Phoenixville, Pa.

1st Lt. W. J. Martin, Staten Is., N. Y., to Sixth Army, Ft. Ord, Calif.

1st Lt. R. R. Mezer, Bedford, Mass., to Cushing Veterans' Adm Hosp, Framingham, Mass.

1st Lt. C. H. Rosenberg, Staten Is., N. Y., to 1st Army, Ft. Monmouth, N. J.

1st Lt. R. Ross, jr., Staten Is., N. Y., to Wm. Beaumont GH, El Paso, Tex.

1st Lt. R. R. Suskind, Staten Is., N. Y., to 2d Army, Cp Lee, Va.

1st Lt. F. H. Wood, Staten Is., N. Y., to 2d Army, Ft. Geo. G. Meade, Md.

2nd Lt. G. M. Lawrence, Ft. Dix, N. J., to Hq 2nd Army, Baltimore, Md.

The following 1st Lts., MC, are reld fr Ft. Sam Houston, Tex., and asgd to sta indicated:

R. P. Bell, jr., AMC, Wash., D. C.
R. W. Breck, AMC, Wash., D. C.
J. S. Brown, AMC, Wash., D. C.
H. W. Camp, jr., AMC, Wash., D. C.
J. J. Chambers, AMC, Wash., D. C.
P. J. Corrigan, AMC, Wash., D. C.
J. P. Greenlees, AMC, Wash., D. C.
O. Gwathmey, AMC, Wash., D. C.
T. H. Haas, AMC, Wash., D. C.
J. G. G. Hendershot, AMC, Wash., D. C.
W. M. Hull, AMC, Wash., D. C.
R. E. Liepman, AMC, Wash., D. C.
M. C. McCord, AMC, Wash., D. C.
L. J. McStravog, AMC, Wash., D. C.
J. J. Murphy, AMC, Wash., D. C.
B. G. Musser, AMC, Wash., D. C.
C. B. Reiner, AMC, Wash., D. C.
W. H. Robinson, AMC, Wash., D. C.
W. B. Smith, AMC, Wash., D. C.
A. W. Thompson, AMC, Wash., D. C.
H. J. Thompson, AMC, Wash., D. C.
C. H. Toomey, AMC, Wash., D. C.
H. F. Van Noate, AMC, Wash., D. C.
R. A. Wenhold, AMC, Wash., D. C.
A. F. Woodward, AMC, Wash., D. C.
C. L. Benjamin, Valley Forge GH, Phoenixville, Pa.
M. P. Brignola, Valley Forge GH, Phoenixville, Pa.
N. Cohen, Valley Forge GH, Phoenixville, Pa.
C. B. Cope, jr., Valley Forge GH, Phoenixville, Pa.
T. F. Graham, Valley Forge GH, Phoenixville, Pa.
R. C. Grandon, Valley Forge GH, Phoenixville, Pa.
E. J. Kowalewski, Valley Forge GH, Phoenixville, Pa.
H. Unterberger, Valley Forge GH, Phoenixville, Pa.
B. Amsterdam, Tilton GH, Ft. Dix, N. J.
A. Azulay, Tilton GH, Ft. Dix, N. J.
A. M. Berg, Tilton GH, Ft. Dix, N. J.
M. H. Berman, Tilton GH, Ft. Dix, N. J.
R. L. DeLuccia, Tilton GH, Ft. Dix, N. J.
R. W. Elwell, Tilton GH, Ft. Dix, N. J.
C. Gandek, Tilton GH, Ft. Dix, N. J.
M. J. Gersh, Tilton GH, Ft. Dix, N. J.
E. R. Goodrich, Tilton GH, Ft. Dix, N. J.
E. B. Leahey, Tilton GH, Ft. Dix, N. J.
J. Mintz, Tilton GH, Ft. Dix, N. J.
R. S. Sanford, Tilton GH, Ft. Dix, N. J.
N. C. Fontneau, jr., Murphy GH, Waltham, Mass.
M. E. Hagedorn, Murphy GH, Waltham, Mass.
H. S. Harned, jr., Murphy GH, Waltham, Mass.
H. F. Fancy, Murphy GH, Waltham, Mass.
J. R. Bowen, Murphy GH, Waltham, Mass.
R. B. Higgins, Murphy GH, Waltham, Mass.
H. R. Chamberlin, Murphy GH, Waltham, Mass.
R. B. Allen, Madigan GH, Ft. Lewis, Wash.
A. DeBoer, Madigan GH, Ft. Lewis, Wash.
R. O. Gillies, jr., Madigan GH, Ft. Lewis, Wash.
C. A. Griffith, Madigan GH, Ft. Lewis, Wash.
H. A. Hoyos-Napoleoni, Madigan GH, Ft. Lewis, Wash.
D. M. Joseph, Madigan GH, Ft. Lewis, Wash.
J. R. Kersten, Madigan GH, Ft. Lewis, Wash.
A. R. Leider, Madigan GH, Ft. Lewis, Wash.
W. C. Meyer, Madigan GH, Ft. Lewis, Wash.
R. L. Miller, Madigan GH, Ft. Lewis, Wash.
A. M. Pantone, Madigan GH, Ft. Lewis, Wash.
T. E. Richmond, Madigan GH, Ft. Lewis, Wash.
A. B. Simon, Madigan GH, Ft. Lewis, Wash.
W. A. Wolfe, Madigan GH, Ft. Lewis, Wash.
R. W. Zalar, Madigan GH, Ft. Lewis, Wash.
H. J. Caven, Fitzsimons GH, Denver, Colo.
R. Chandler, Fitzsimons GH, Denver, Colo.
E. R. Cleveland, Fitzsimons GH, Denver, Colo.
V. F. Deyke, Fitzsimons GH, Denver, Colo.
R. B. Dodd, Fitzsimons GH, Denver, Colo.
R. A. Hall, Fitzsimons GH, Denver, Colo.
F. W. Howard, Fitzsimons GH, Denver, Colo.
L. A. James, Fitzsimons GH, Denver, Colo.
J. D. Levinson, Fitzsimons GH, Denver, Colo.
J. S. Long, Fitzsimons GH, Denver, Colo.
P. J. McFarlane, Fitzsimons GH, Denver, Colo.
E. G. Merritt, Fitzsimons GH, Denver, Colo.
R. J. Milos, Fitzsimons GH, Denver, Colo.
V. V. Quandt, Fitzsimons GH, Denver, Colo.
G. Ritter, Fitzsimons GH, Denver, Colo.
G. J. Schejbal, Fitzsimons GH, Denver, Colo.
H. E. Sorensen, Fitzsimons GH, Denver, Colo.
G. W. Brown, William Beaumont GH, El Paso, Tex.
C. B. Dryden, jr., William Beaumont GH, El Paso, Tex.
R. D. Hoover, William Beaumont GH, El Paso, Tex.
F. P. Kallina, William Beaumont GH, El Paso, Tex.
W. P. Lerblance, jr., William Beaumont GH, El Paso, Tex.
H. B. McManus, jr., William Beaumont GH, El Paso, Tex.
A. M. Magliolo, William Beaumont GH, El Paso, Tex.
V. D. Matthews, jr., William Beaumont GH, El Paso, Tex.
E. V. Powell, jr., William Beaumont GH, El Paso, Tex.
W. T. Robinson, William Beaumont GH, El Paso, Tex.
R. E. Scheurich, William Beaumont GH, El Paso, Tex.
H. G. Tozer, William Beaumont GH, El Paso, Tex.
D. D. Donaldson, Seventh Army, Ft. Bragg, N. C.
H. C. Johnson, Sixth Army SFPE, Ft. Mason, Calif.
R. G. Connar, 27th AAF Base Unit, Randolph Fld, Tex.
M. J. Gardner, Second Army Regional Sta Hosp, Ft. Knox, Ky.
L. E. Zimmerman, US Army Gen Dispensary, Wash., D. C.
R. C. Polk, Seventh Army, Ft. Benning, Ga.
J. A. Garrisi, William Beaumont GH, El Paso, Tex.
R. W. Osborne, Sixth Army SFPE, Ft. Mason, Calif.
R. L. Allen, Percy Jones GH, Battle Creek, Mich.
R. W. Bacorn, Percy Jones GH, Battle Creek, Mich.
R. S. Barry, jr., Percy Jones GH, Battle Creek, Mich.
C. D. Benedict, Percy Jones GH, Battle Creek, Mich.
D. G. Dickinson, Percy Jones GH, Battle Creek, Mich.
D. W. Everett, Percy Jones GH, Battle Creek, Mich.
J. G. Fortner, Percy Jones GH, Battle Creek, Mich.
W. C. Frayer, Percy Jones GH, Battle Creek, Mich.
J. F. Hartmen, jr., Percy Jones GH, Battle Creek, Mich.
W. J. Hendrickson, Percy Jones GH, Battle Creek, Mich.
W. J. Kenfield, Percy Jones GH, Battle Creek, Mich.
O. B. Johnson, Percy Jones GH, Battle Creek, Mich.
L. M. Lasser, Percy Jones GH, Battle Creek, Mich.
W. R. Morse, Percy Jones GH, Battle Creek, Mich.
D. M. Schlegel, Percy Jones GH, Battle Creek, Mich.
P. J. Slosser, Percy Jones GH, Battle Creek, Mich.
W. W. Tuckerman, Percy Jones GH, Battle Creek, Mich.
D. Zavela, Percy Jones GH, Battle Creek, Mich.
R. G. Jennings, jr., Oliver GH, Augusta, Ga.
A. A. McLean, jr., Oliver GH, Augusta, Ga.
J. W. Reid, Oliver GH, Augusta, Ga.
G. H. Anderson, Oliver GH, Augusta, Ga.
R. M. Anderson, Oliver GH, Augusta, Ga.
R. G. Boles, Oliver GH, Augusta, Ga.
J. Brock, Oliver GH, Augusta, Ga.
W. T. Brown, jr., Oliver GH, Augusta, Ga.
A. L. Bullard, Oliver GH, Augusta, Ga.
G. W. Burroughs, Oliver GH, Augusta, Ga.
O. B. Bush, jr., Oliver GH, Augusta, Ga.
C. L. Butler, Oliver GH, Augusta, Ga.
C. C. Fargason, jr., Oliver GH, Augusta, Ga.
W. L. Foster, Oliver GH, Augusta, Ga.
J. T. King, Oliver GH, Augusta, Ga.
C. H. Likins, jr., Oliver GH, Augusta, Ga.
F. J. Little, jr., Oliver GH, Augusta, Ga.
E. A. Mayo, jr., Oliver GH, Augusta, Ga.
M. D. Moody, Oliver GH, Augusta, Ga.
R. S. Pollitzer, Oliver GH, Augusta, Ga.
J. E. Ryan, Oliver GH, Augusta, Ga.
R. E. Schoel, Oliver GH, Augusta, Ga.
E. L. Scott, Oliver GH, Augusta, Ga.
W. H. Smith, Oliver GH, Augusta, Ga.
J. W. Somerville, Oliver GH, Augusta, Ga.
J. M. Townsend, Oliver GH, Augusta, Ga.
H. M. White, jr., Oliver GH, Augusta, Ga.
H. M. Yonge, Oliver GH, Augusta, Ga.
R. L. Anderegg, Letterman GH, San Francisco, Calif.
L. M. Bernstein, Letterman GH, San Francisco, Calif.
D. C. Dawson, Letterman GH, San Francisco, Calif.
I. A. Friedman, Letterman GH, San Francisco, Calif.
L. N. Giannasi, Letterman GH, San Francisco, Calif.
R. E. Hopkins, Letterman GH, San Francisco, Calif.
L. G. Lloyd, Letterman GH, San Francisco, Calif.
H. F. Norman, Letterman GH, San Francisco, Calif.
F. J. Novak, III, Letterman GH, San Francisco, Calif.
S. J. Polk, Letterman GH, San Francisco, Calif.
J. C. Reidenbach, Letterman GH, San Francisco, Calif.
J. V. Schetgen, Letterman GH, San Francisco, Calif.
M. P. Southwick, Letterman GH, San Francisco, Calif.
K. Stillwater, Letterman GH, San Francisco, Calif.
M. D. Thomas, Letterman GH, San Francisco, Calif.
A. A. Windham, Letterman GH, San Francisco, Calif.
H. C. Blay, 401st AAF Base Unit Air De-

(Please turn to Next Page)

Army Orders

(Continued from Preceding Page)

fense Comd, Hamilton Fld, San Rafael, Calif.
R. V. Blumhagen, 104th AAF Base Unit Air Defense Comd, Mitchel Fld, L. I., N. Y.
D. E. Bradshaw, 104th AAF Base Unit Air Defense Comd, Mitchel Fld, L. I., N. Y.
N. S. Butterworth, 304th AAF Base Unit Tactical Air Comd, Langley Fld, Va.
J. B. Cluff, 321st AAF Base Unit Tactical Air Comd, March Fld, Riverside, Calif.
A. E. DeNio, jr., 1st AAF Base Unit Strategic Air Comd, Bolling Fld, Wash., D. C.
J. W. DeVore, 326th AAF Base Unit Strategic Air Comd, MacDill Fld, Fla.
R. W. Herpolsheimer, 247th AAF Base Unit Strategic Air Comd, Smoky Hill AA Fld, Salina, Kans.
W. M. Hindman, 1377th AAF Base Unit Air Tng Comd, Westover Fld, Mass.
W. D. Holst, 2621st AAF Base Unit Air Tng Comd, Barksdale Fld, La.
E. H. Kowalski, 3502d AAF Base Unit Air Tng Comd, Chanute Fld, Ill.
D. W. Koza, 3502d AAF Base Unit Air Tng Comd, Chanute Fld, Ill.
D. O. Newland, 4118th AAF Base Unit Strategic Air Comd, Ft. George Wright, Wash.
C. E. Parmley, 3704th AAF Base Unit Air Tng Comd, Keesler Fld, Miss.
D. W. Peters, 3704th AAF Base Unit Air Tng Comd, Keesler Fld, Miss.
R. H. Ruby, 3705th AAF Base Unit Air Tng Comd, Lowry Fld, Denver, Colo.
C. P. Salyer, 3705th AAF Base Unit Air Tng Comd, Lowry Fld, Denver, Colo.
J. K. Tillotson, 3543d AAF Base Unit Air Tng Comd Indoctrination Div, San Antonio, Tex.
C. F. Watson, 3543d AAF Base Unit Tng Comd Indoctrination Div, San Antonio, Tex.
R. B. Wilson, 3505th AAF Base Unit Air Tng Comd, Scott Fld, Ill.
C. J. Hoffman, First Army Eastern Br US Disciplinary Bks, Green Haven, N. Y.
M. E. Steinberg, Sixth Army WDPC, Ft. Lewis, Wash.
J. L. Raffa, Fifth Army, Cp Carson, Colo.
A. E. Draper, Seventh Army, Ft. Jackson, S. C.
J. H. Playfair, jr., Second Army, Ft. Hayes, Ohio.
R. E. Bowers, Madigan GH, Ft. Lewis, Wash.
G. W. Flint, Seventh Army, Ft. Jackson, S. C.
M. M. Ashley, Seventh Army, Ft. McPherson, Ga.
P. D. Gard, jr., Seventh Army, Ft. Bragg, N. C.
T. P. Jernigan, III, Seventh Army, Ft. Bragg, N. C.
S. H. Katz, Seventh Army, Ft. Oglethorpe, Ga.
L. B. Turner, Seventh Army, Ft. Jackson, S. C.

Dental Corps

1st Lt. D. L. Kelly, Ft. Wayne, Mich., Hq 5th Army, Chicago, Ill.
1st Lt. M. Greenberg, Cp Atterbury, Ind., to 7th Army Sta Comp, Ft. Bragg, N. C.
1st Lt. W. J. Daly, Cp Atterbury, Ind., to 7th Army Sta Comp, Ft. Bragg, N. C.
1st Lt. D. Henry, Cp Atterbury, Ind., to 7th Army Sta Comp, Ft. Bragg, N. C.
1st Lt. N. Schlesinger, San Francisco, Calif., to 6th Army, Ft. Douglas, Utah.
1st Lt. W. N. Abood, Ft. Dix, N. J., to Hq 5th Army, Chicago, Ill.
1st Lt. E. Yee, jr., Ft. Riley, Kans., to 4131 AAF BU Offutt Fld, Ft. Crook, Nebr.

Medical Administrative Corps

Maj. A. J. Marsala, Ft. Sam Houston, Tex., to RTC, Ft. Ord, Calif.
Maj. D. E. Sanches, Cp Beale, Calif., to RTC, Ft. Ord, Calif.
Maj. A. T. Wegenka, Ft. Sam Houston, Tex., to Hq 2d Army, Balto., Md.
Capt. E. J. Atchison, Ft. Custer, Mich., to RTC, Ft. Knox, Ky.
Capt. A. J. Bruno, Ft. Dix, N. J., to Gen Dep, Atlanta, Ga.
Capt. J. W. Hatcher, jr., Ft. Custer, Mich., to RTC, Ft. Knox, Ky.
Capt. J. F. Humphrey, Brentwood, L. I., N. Y., to RTC, Ft. Dix, N. J.
Capt. J. H. Keim, Ft. Custer, Mich., to RTC, Ft. Knox, Ky.
Capt. J. E. Brady, El Paso, Tex., to Brooke AMC, Ft. Sam Houston, Tex.
Capt. D. C. Burke, Cp Polk, La., to Brooke AMC, Ft. Sam Houston, Tex.
Capt. C. W. Childers, Ft. Sam Houston, Tex., to Army and Navy GH, Hot Springs Nat'l Pk, Ark.
Capt. S. P. Bednarczyk, Oak Ridge, Tenn., to Tilton GH, Ft. Dix, N. J.
Capt. J. A. Enger, Ft. Custer, Mich., to RTC, Ft. Knox, Ky.
Capt. T. K. Healy, Cp Hood, Tex., to RTC, Ft. Lewis, Wash.
Capt. F. J. Herschleder, Brooklyn, N. Y., to RTC, Ft. Dix, N. J.
Capt. A. A. Oviatt, Ft. Custer, Mich., to Percy Jones GH, Battle Creek, Mich.
Capt. B. S. Larivee, Tacoma, Wash., to RTC, Ft. Lewis, Wash.
Capt. J. P. McKeon, Denver, Colo., to RTC, Ft. Ord, Calif.
Capt. J. S. Snyder, Cp Hood, Tex., to RTC, Ft. Lewis, Wash.
Capt. W. H. Kilborn, Santa Fe, N. Mex., to Letterman GH, San Francisco, Calif.
Capt. C. L. Aronson, Cp Campbell, Ky., to RTC, Ft. Dix, N. J.
Capt. H. L. Wamble, Cp Campbell, Ky., to RTC, Ft. Dix, N. J.
Capt. H. Wilson, Cp Campbell, Ky., to RTC, Ft. Dix, N. J.
1st Lt. H. K. Boyce, jr., Ft. Custer, Mich., to RTC, Ft. Lewis, Wash.
1st Lt. G. C. Cauble, jr., Los Angeles, Calif., to 7th Army, Ft. Benning, Ga.
1st Lt. R. E. Clark, Ft. Custer, Mich., to RTC, Ft. Knox, Ky.
1st Lt. P. E. Kurzdorfer, Cp Hood, Tex., to RTC, Ft. Lewis, Wash.
1st Lt. D. R. Anderson, Ft. Custer, Mich., to RTC, Ft. Knox, Ky.
1st Lt. J. W. Kicklighter, Denver, Colo., to RTC, Ft. Ord, Calif.
1st Lt. J. B. Leonard, jr., Cp Polk, La., to Repl Tng Ctr, Ft. Ord, Calif.
1st Lt. P. J. Lowder, Santa Fe, N. Mex., to Letterman GH, San Francisco, Calif.
1st Lt. I. F. McCall, Santa Fe, N. Mex., to Letterman GH, San Francisco, Calif.
1st Lt. J. R. Nelson, Cp Polk, La., to Brooke AMC, Ft. Sam Houston, Tex.
1st Lt. G. W. Neville, Ft. Custer, Mich., to RTC, Ft. Knox, Ky.
1st Lt. R. M. Powers, Ft. Jay, N. Y., to 1st Army Sta Hosp, Cp Kilmer, N. J.
1st Lt. J. Rodriguez, Cp Campbell, Ky., to RTC, Ft. Knox, Ky.
1st Lt. M. F. Slayter, Ft. Custer, Mich., to RTC, Ft. Knox, Ky.
1st Lt. R. C. Thompson, Cp Polk, La., to RTC, Ft. Ord, Calif.
1st Lt. W. G. Winser, Cp Polk, La., to RTC, Ft. Ord, Calif.
1st Lt. G. A. Clark, jr., Cp Campbell, Ky., to 6th Army RSH, Ft. Ord, Calif.
1st Lt. J. A. Cook, jr., Cp Campbell, Ky., to RTC, Ft. Dix, N. J.
1st Lt. L. R. Downing, Ft. Custer, Mich., to AMC, Wash., D. C.
1st Lt. F. L. Harper, Cp Campbell, Ky., to RTC, Ft. Dix, N. J.
1st Lt. W. V. Parker, Cp Campbell, Ky., to RTC, Ft. Dix, N. J.
1st Lt. W. Sabetay, Cp Campbell, Ky., to RTC, Ft. Dix, N. J.
1st Lt. B. Sebastian, Cp Campbell, Ky., to RTC, Ft. Dix, N. J.
1st Lt. J. L. Weaver, Ft. Custer, Mich., to AMC, Wash., D. C.
2nd Lt. H. F. Buskirk, Cp Campbell, Ky., to Percy Jones GH, Battle Creek, Mich.
2nd Lt. C. E. Clutter, Ft. Knox, Ky., to Tilton GH, Ft. Dix, N. J.
2nd Lt. J. E. Dorgan, Cp Campbell, Ky., to Percy Jones GH, Battle Creek, Mich.
2nd Lt. M. F. Iafrate, Ft. Custer, Mich., to RTC, Ft. Knox, Ky.
2nd Lt. H. G. Matter, Ft. Custer, Mich., to Percy Jones GH, Battle Creek, Mich.
2nd Lt. V. T. Collins, Cp Campbell, Ky., to RTC, Ft. Dix, N. J.
2nd Lt. F. V. Fox, Cp Campbell, Ky., to RTC, Ft. Dix, N. J.
2nd Lt. J. P. Marto, Cp Campbell, Ky., to RTC, Ft. Dix, N. J.
2nd Lt. G. A. O'Connor, Cp Campbell, Ky., to RTC, Ft. Dix, N. J.
2nd Lt. R. J. Yeakel, Cp Campbell, Ky., to RTC, Ft. Dix, N. J.

Pharmacy Corps

Capt. E. H. Frick, Ft. Custer, Mich., to RTC, Ft. Knox, Ky.
Capt. F. G. Togerson, Ft. Custer, Mich., to RTC, Ft. Knox, Ky.
Capt. A. Scarpitta, Ft. Meade, Md., to RTC, Ft. Jackson, S. C.
1st Lt. J. L. Flora, Cp Campbell, Ky., to RTC, Ft. Dix, N. J.

Veterinary Corps

Maj. E. S. Watkins, Cp Carson, Colo., to 5th Army Vet Food Inspection Sv, Chicago.
Capt. J. Armstrong, NYC, to 1st Army Det. No. 3, Ft. Hamilton, N. Y.
Capt. T. E. Head, jr., San Antonio, Tex., to 4th Army, Ft. Sam Houston, Tex.
Capt. J. S. King, San Antonio, Tex., to 4th Army, Ft. Sam Houston, Tex.
1st Lt. G. C. Borst, jr., NYC, to 1st Army Sta Comp, Ft. H. G. Wright, N. Y.
1st Lt. G. A. Ellmers, Oakland, Calif., to 4th Army, Ft. Sill, Okla.
1st Lt. R. B. Greiner, Ft. Worth, Tex., to Gen Dep, Stockton, Calif.

Sanitary Corps

Maj. R. E. Leach, Denver, Colo., to Letterman GH, San Francisco, Calif.

Dietitians

1st Lt. M. E. Cuff, Staten Island, N. Y., to Valley Forge GH, Phoenixville, Pa.
1st Lt. F. L. Johnson, Staten Island, N. Y., to 6th Army RSH, Ft. Ord, Calif.
1st Lt. A. L. Lyng, Staten Island, N. Y., to Valley Forge GH, Phoenixville, Pa.
1st Lt. J. F. Sims, Cp Carson, Colo., to Madigan GH, Ft. Lewis, Wash.
2nd Lt. V. A. Boyden, Staten Is., N. Y., to Madigan GH, Ft. Lewis, Wash.
2nd Lt. H. A. Greene, Ft. Knox, Ky., to 2d Army RSH, Ft. Geo. G. Meade, Md.

Army Nurse Corps

COL. F. A. BLANCHFIELD, SUPT.

Lt. Col J. Peters, Ft. Knox, Ky., to Hq 6th Army, San Francisco, Calif.
Capt. R. M. Saar, Ft. Mason, Calif., to 6th Army, Cp Stoneman, Calif.
Capt. M. M. Teague, Phoenixville, Pa., to Army and Navy GH, Hot Springs Nat'l Park, Ark.
Capt. C. M. Ullom, Hot Springs Nat'l Pk, to 5th Army, Ft. Robinson, Nebr.
Capt. M. A. Walrod, Cp Polk, La., to Army and Navy GH, Nat'l Park, Hot Springs, Ark.
1st Lt. M. Lawrence, Aberdeen Pr Gr, to Pratt GH, Coral Gables, Fla.
1st Lt. G. D. Nack, Cp Atterbury, Ind., to Tilton GH, Ft. Dix, N. J.
1st Lt. I. B. Schwarz, Ft. Dix, N. J., to Murphy GH, Waltham, Mass.
1st Lt. E. M. Davidson, Cp Atterbury, Ind., to Valley Forge GH, Phoenixville, Pa.
1st Lt. G. M. Grifser, Cp Atterbury, Ind., to AMC, Wash., D. C.
1st Lt. V. B. Matson, Ft. Sam Houston, Tex., to Tilton GH, Ft. Dix, N. J.
1st Lt. D. R. Marcus, Cp Atterbury, Ind., to AMC, Wash., D. C.
1st Lt. I. S. Paulson, Cp Atterbury, Ind., to Valley Forge GH, Phoenixville, Pa.
1st Lt. A. Self, Ft. Benning, Ga., to Hq 2d Army, Baltimore, Md.
1st Lt. F. J. Spillman, Cp Atterbury, Ind., to Valley Forge GH, Phoenixville, Pa.
1st Lt. R. B. Trocino, Cp Atterbury, Ind., to Fitzsimons GH, Denver, Colo.
1st Lt. F. O. Worthington, Cp Polk, La., to Army and Navy GH, Nat'l Park, Hot Springs, Ark.
1st Lt. C. E. Blumberg, Staten Is., N. Y., to AMC, Wash., D. C.
2nd Lt. R. J. Ball, Cp Atterbury, Ind., to Valley Forge GH, Phoenixville, Pa.
2nd Lt. I. E. Flatau, Cp Atterbury, Ind., to Fitzsimons GH, Denver, Colo.
2nd Lt. E. J. Hendrickson, Wash., D. C., to 326th AAF BU Strategic Air Comd, MacDill Fld, Tampa, Fla.
2nd Lt. S. Levor, Cp Hood, to Tilton GH, Ft. Dix, N. J.
2nd Lt. C. V. Rohlfing, Staten Is., N. Y., to Fitzsimons GH, Denver, Colo.
2nd Lt. E. M. Smith, Denver, Colo., to Percy Jones GH, Battle Creek, Mich.
2nd Lt. M. M. Sostik, Cp Atterbury Ind., to AMC, Wash., D. C.
2nd Lt. F. E. Thompson, Cp Atterbury, Ind., to Fitzsimons GH, Denver, Colo.
From Halloran GH, St. George, S. I., N. Y., to station indicated:
Capt. L. R. Jewell, Fitzsimons GH, Denver, Colo.
Capt. F. J. Neveroski, Oliver GH, Augusta, Ga.
1st Lt. E. Henderson, Oliver GH, Augusta, Ga.
1st Lt. V. H. Laurie, Oliver GH, Augusta, Ga.
Capt. E. T. Merscher, First Army Sta Hosp, Cp Kilmer, N. J.
1st Lt. R. F. Burr, First Army Sta Hosp, Cp Kilmer, N. J.
1st Lt. M. M. Foley, First Army Sta Hosp, Cp Kilmer, N. J.
1st Lt. A. C. Foster, First Army Sta Hosp, Cp Kilmer, N. J.
1st Lt. L. Leith, First Army Sta Hosp, Cp Kilmer, N. J.
1st Lt. M. L. Martin, First Army Sta Hosp, Cp Kilmer, N. J.
2nd Lt. M. B. Dutilly, First Army Sta Hosp, Cp Kilmer, N. J.
1st Lt. R. R. Dulisse, Valley Forge GH, Phoenixville, Pa.
1st Lt. D. G. Fehr, Valley Forge GH, Phoenixville, Pa.
1st Lt. C. L. Pritchard, Valley Forge GH, Phoenixville, Pa.
1st. Lt. S. A. Shannon, Valley Forge GH, Phoenixville, Pa.
1st Lt. V. Shelton, Valley Forge GH, Phoenixville, Pa.
1st Lt. E. Thomas, Valley Forge GH, Phoenixville, Pa.
1st Lt. M. M. Villanelli, Valley Forge GH, Phoenixville, Pa.
1st Lt. H. P. McCafferty, Valley Forge GH, Phoenixville, Pa.
1st Lt. G. B. Bernard, Valley Forge GH, Phoenixville, Pa.
2nd Lt. E. V. Gordon, Valley Forge GH, Phoenixville, Pa.
2nd Lt. A. E. Prouty, Valley Forge GH, Phoenixville, Pa.

(Please turn to Next Page)

HOTEL DIRECTORY

■ CALIFORNIA

HOTEL CANTERBURY
750 SUTTER ST · SAN FRANCISCO
Right downtown, yet quiet and luxurious
250 rooms, all outside, all with bath
Excellent Dining Room
Special rates to men of the Armed Forces
SINGLE—From $2.50 • DOUBLE—From $3.50

■ FLORIDA

■ MARYLAND

SOUTHERN HOTEL
Baltimore's Foremost
Centrally Located
Headquarters of ARMY and NAVY Officers
Baltimore Maryland

■ NEW YORK

■ WASHINGTON, D. C.

BRIGHTON HOTEL
2123 California St.
Washington, D. C.
Modern Fireproof Apartment Hotel
Newly Furnished
Excellent Dining Room
ARTHUR E. HACK, Mgr.

BURLINGTON HOTEL
Gen. Mgr. Hudson S. Moses, U. S. Naval Res.
1116 VERMONT AVENUE
• Central location, near everything.
• Friendly service.
• Modern transient rooms with bath and furnished apartments.
• Coffee shop, lounge, dining room.
10% DISCOUNT TO SERVICE PERSONNEL
WASHINGTON, D. C.

HOTEL MARTINIQUE
SIXTEENTH STREET AT M
WASHINGTON, D. C.
Easily accessible to new War and Navy Buildings.
25 PER CENT REDUCTION in room rates to officers on Active Duty. Every room with Bath.
Write for Detailed information.
L. R. Hawkins, Manager

HOTEL TWENTY-FOUR HUNDRED
HOTEL 2400
2400 16th Street, N. W.
Washington, D. C.
Washington's Exclusive Apartment Hotel. Furnished apartments. Transient accommodations. Cocktail Lounge and Dining Room. Air Conditioned. Excellent cuisine.
C. L. HUTCHINSON, Gen. Mgr.

Army Orders

(Continued from Preceding Page)

Capt. G. McDowell, Tilton GH, Ft. Dix, N. J.
1st Lt. B. T. Hasbrouck, Tilton GH, Ft. Dix, N. J.
1st Lt. L. T. Johnson, Tilton GH, Ft. Dix, N. J.
1st Lt. A. B. Mullin, Tilton GH, Ft. Dix, N. J.
1st Lt. A. A. Granese, First Army Regional Sta Hosp, Ft. Jay, N. Y.
1st Lt. L. M. Mandel, First Army Regional Sta Hosp, Ft. Jay, N. Y.
2nd Lt. M. I. Munster, Madigan GH, Ft. Lewis, Wash.
Capt. F. G. Carmine, ANC AMC, Wash., D. C.
Capt. K. R. Doran, ANC AMC, Wash., D. C.
Capt. M. A. Kinter, ANC AMC, Wash., D. C.
Capt. M. E. O'Donnell, ANC, AMC, Wash., D. C.
1st Lt. I. R. Sykes, ANC AMC, Wash., D. C.
Capt. E. R. McGinnes, ANC, Madigan GH, Tacoma, Wash.
Capt. E. M. Oberkirch, ANC, Madigan GH, Tacoma, Wash.
1st Lt. J. Dennis, ANC, Brooke AMC, Ft. Sam Houston, Tex.
1st Lt. A. J. Gray, ANC, Brooke AMC, Ft. Sam Houston, Tex.
Capt. S. E. McAllister, ANC, Brooke AMC, Ft. Sam Houston, Tex.
From Wakeman GH, Cp Atterbury, Ind., to station indicated:
1st Lt. E. C. Probasco, Madigan GH, Ft. Lewis, Wash.
1st Lt. E. Streich, Fitzsimons GH, Denver, Colo.
2nd Lt. M. E. Cutting, Fitzsimons GH, Denver, Colo.
2nd Lt. O. A. Falls, Fitzsimons GH, Denver, Colo.
2nd Lt. H. J. Ousler, Fitzsimons GH, Denver, Colo.
2nd Lt. D. I. Shrewsbury, Fitzsimons GH, Denver, Colo.
2nd H. E. Sims, Fitzsimons GH, Denver, Colo.
Capt. A. T. Jackowski, Valley Forge GH, Phoenixville, Pa.
1st Lt. M. G. Condon, Valley Forge GH, Phoenixville, Pa.
1st Lt. R. E. Dvorschak, Valley Forge GH, Phoenixville, Pa.
1st Lt. N. A. Kelley, Valley Forge GH, Phoenixville, Pa.
1st Lt. F. L. Monske, Valley Forge GH, Phoenixville, Pa.
2nd Lt. R. Brown, Valley Forge GH, Phoenixville, Pa.
2nd Lt. C. H. Roth, Valley Forge GH, Phoenixville, Pa.

ORDNANCE DEPARTMENT

MAJ. GEN. E. S. HUGHES, C OF O

Lt. Col. J. L. Grubb, Ft. Meade, Md., to Ord Dist, Detroit, Mich.
Lt. Col. A. L. Hettrick, Ft. Lewis, Wash., to Hq 6th Army, San Francisco, Calif.
Lt. Col. C. Longley, jr., Cp Beale, Calif., to 6701st ASU Calif-Nev OR Instr Gp, San Francisco.
Lt. Col. T. G. McCoy, Shreveport, La., to Milan Ars, Milan, Tenn.
Maj. H. E. Krull, Aberdeen Pr Gr, Md., to MDW, Ft. Belvoir, Va.
Maj. W. R. Rathbone, Ft. Sam Houston, Tex., to White Sands Pr Gr, Las Cruces, N. Mex.
Maj. D. V. Roles, Cp Campbell, Ky., to Hq 2d Army, Baltimore, Md.
Capt. F. E. Bulman, Chicago, Ill., to Office of Sr Gr Instr, Topeka, Kans.
Capt. E. M. Campbell, Chicago, Ill., to Office of Sr Gr Instr, Denver, Colo.
Capt. F. J. Drew, Cp Beale, Calif., to Ala Ord Works, Sylacauga, Ala.
Capt. G. A. Hess, Ft. Ord, Calif., to 6th Army 3540th Med Auto Maint Co., Ft. Lewis, Wash.
Capt. K. G. Ward, Ft. Dix, N. J., to Ogden Ars, Ogden, Utah.
Capt. T. E. Demasse, Aberdeen Pr Gr, Md., to RTC, Ft. Dix, N. J.
Capt. R. T. Mailheau, Aberdeen Pr Gr, Md., to RTC, Ft. Dix, N. J.
Capt. E. Nalence, Aberdeen Pr Gr, Md., to RTC, Ft. Dix, N. J.
Capt. S. P. Smith, Aberdeen Pr Gr, Md., to RTC, Ft. Dix, N. J.
Capt. A. A. Watts, Aberdeen Pr Gr, Md., to RTC, Ft. Dix, N. J.
1st Lt. L. Bangsboll, Aberdeen Pr Gr, Md., to 82d Airborne Div, Ft. Bragg, N. C.
1st Lt. O. Garcia, Chicago, Ill., to Office of Sr Gr Instr, Jefferson City, Mo.
1st Lt. E. E. Laugen, Chicago, Ill., to Office of Sr Gr Instr, Madison, Wis.
1st Lt. G. A. McGannon, Wash., D. C., to Research and Development Sv, Ft. Bliss, Tex.
1st Lt. W. E. Morrisey, Chicago, Ill., to Office of Sr Gr Instr, Lincoln, Nebr.
1st Lt. C. V. Van Zant, Aberdeen Pr Gr, Md., to OCO, Wash., D. C.
1st Lt. A. H. Pepp, Chicago, Ill., to Office of Sr Gr Instr, St. Paul, Minn.
1st Lt. R. M. Sears, Chicago, Ill., to Office of Sr Gr Instr, Des Moines, Iowa.
1st Lt. S. D. Treece, Aberdeen Pr Gr, Md., to OCO, Wash., D. C.
1st Lt. L. E. Trowbridg, Aberdeen Pr Gr, Md., to Raritan Ars, Metuchen, N. J.
1st Lt. R. U. Walnes, Ft. Dix, N. J., to Picatinny Ars, Dover, N. J.
1st Lt. H. T. Cutter, jr., Aberdeen Pr Gr, Md., to RTC, Ft. Dix, N. J.
1st Lt. T. F. Debarbieri, Aberdeen Pr Gr, Md., to RTC, Ft. Dix, N. J.
1st Lt. R. F. Hazucha, Aberdeen Pr Gr, Md., to RTC, Ft. Dix, N. J.
1st Lt. G. Holstrom, Abrdeen Pr Gr, Md., to RTC, Ft. Dix, N. J.
1st Lt. R. H. Hubble, Aberdeen Pr Gr, Md., to RTC, Ft. Dix, N. J.
1st Lt. D. F. Leary, Aberdeen Pr Gr, Md., to RTC, Ft. Dix, N. J.
1st Lt. J. P. Mooney, Aberdeen Pr Gr, Md., to RTC, Ft. Dix, N. J.
1st Lt. T. H. Pike, Aberdeen Pr Gr, Md., to RTC, Ft. Dix, N. J.
1st Lt. W. F. McHarg, Aberdeen Pr Gr, Md., to RTC, Ft. Dix, N. J.
1st Lt. R. Powrs, Aberdeen Pr Gr, Md., to RTC, Ft. Dix, N. J.
1st Lt. A. C. Robinson, Aberdeen Pr Gr, Md., to RTC, Ft. Dix, N. J.
1st Lt. G. A. Sather, Aberdeen Pr Gr, Md., to RTC, Ft. Dix, N. J.
1st Lt. A. J. Sunseri, Aberdeen Pr Gr, Md., to RTC, Ft. Dix, N. J.
2nd Lt. F. F. Cannon, Aberdeen Pr Gr, Md., to 82d Airborne Div, Ft. Bragg, N. C.
2nd Lt. C. L. Cook, Aberdeen Pr Gr, Md., to Blue Grass Ord Dep, Richmond, Ky.
2nd Lt. R. A. Peltier, Chicago, Ill., to Office of Sr Gr Instr, Rapid City, S. Dak.
2nd Lt. C. S. Golen, Aberdeen Pr Gr, Md., to RTC, Ft. Dix, N. J.
2nd Lt. J. C. Gossett, Aberdeen Pr Gr, Md., to RTC, Ft. Dix, N. J.
2nd Lt. W. F. Muller, Aberdeen Pr Gr, Md., to RTC, Ft. Dix, N. J.
2nd Lt. M. M. Rothman, Aberdeen Pr Gr, Md., to RTC, Ft. Dix, N. J.

CHEMICAL CORPS

MAJ. GEN. A. H. WAITT, C OF CML C

Lt. Col. R. W. Muth, Edgewood Ars, Md., to Army Forces Staff College, Norfolk, Va.
Capt. J. B. Marangella, Chicago, Ill., to OC Cml Corps, Wash., D. C.
Capt. J. F. Olds, jr., Edgewood Ars, Md., to Cp Kilmer, N. J.
1st Lt. G. G. Bachman, Ft. Knox, Ky., to Dugway Pr Gr, Tooele, Utah.
2nd Lt. W. G. Simpson, Wash., D. C., to Army Cml Ctr, Edgewood Ars, Md.

CHAPLAINS CORPS

MAJ. GEN. L. D. MILLER, C OF C

Lt. Col. J. B. Murphy, Cp Beale, Calif., to 6th Army, Post Operating Co, Ft. Lewis, Wash.
Maj. H. F. Gerecke, Ft. Dix, N. J., to 5th Army, Northern Br USDB, Milwaukee, Wis.
Capt. M. D. Barrick, Swannanoa, N. C., to 7th Army ASU 3420, Ft. Bragg, N. C.
Capt. L. V. Bradley, jr., Coral Gables, Fla., to 7th Army ASU 3511 Ord Dep, Atlanta, Ga.
Capt. R. B. Mathis, Ft. McClellan, Ala., to 7th Army ASU 3420, Ft. Bragg, N. C.
1st Lt. W. H. Green, Brooklyn, N. Y., to 7th Army, Ft. Jackson, S. C.

TRANSPORTATION CORPS

MAJ. GEN. E. H. LEAVEY, C OF T

Col. W. E. Burr, Ft. Mason, Calif., to AGO Casuals, Wash., D. C.
Col. L. V. Chaplin, Brooklyn, N. Y., to AGO Casuals, Wash., D. C.
Col. R. M. O'Day, Seattle, Wash., to AGO Casuals, Wash., D. C.
Col. F. C. Scofield, Ft. Hamilton, N. Y., to AGO Casuals, Wash., D. C.
Lt. Col. I. L. Brenneman, Brooklyn, N. Y., to OCT, Wash., D. C.
Lt. Col. E. Taylor, Ft. Eustis, Va., to NOPE, New Orleans, La.
Maj. P. M. Fellencer, Ft. Dix, N. J., to 1st Army 1202d ASU, NYC.
Maj. S. P. Johnson, Ft. Dix, N. J., to SFPE, Ft. Mason, Calif.
Maj. C. W. McKeown, Ft. Dix, N. J., to Ft. Eustis, Va.
Capt. G. W. Bradley, Ft. Dix, N. J., to NYPE, Brooklyn, N. Y.
Capt. W. H. Dewey, Ft. Dix, N. J., to NOPE, New Orleans, La.
Capt. T. H. Evans, Cp Beale, Calif., to Cp Stoneman, Calif.
Capt. H. T. Gifford, Ft. Dix, N. J., to Cp Kilmer, N. J.
Capt. F. Glump, Ft. Dix, N. J., to SFPE, Ft. Mason, Calif.
Capt. J. D. Hale, jr., Cp Beale, Calif., to Cp Stoneman, Calif.
Capt. R. F. Kissel, Philadelphia, Pa., to Cp Kilmer, N. J.
Capt. O. Hala, Ft. Dix, N. J., to NYPE, Brooklyn, N. Y.
Capt. J. L. Koloski, Ft. Eustis, Va., to Hq 7th Army, Atlanta, Ga.
Capt. E. L. Lahey, Brooklyn, N. Y., to Cp Kilmer, N. J.
Capt. J. J. Macken, Ft. Dix, N. J., to Cp Stoneman, Calif.
Capt. P. E. O'Connor, Wash., D. C., to TC Repl Pool, Ft. Eustis, Va.
Capt. H. H. Sharpe, NYC, to 1st Army Sta Comp HD, Ft. Williams, Me.
Capt. A. J. Walsh, Ft. Dix, N. J., to Cp Kilmer, N. J.
Capt. J. R. Matthews, San Francisco, to 6th Army Rctg Sv, Portland, Ore.
Capt. A. J. Walsh, Ft. Dix, N. J., to Hq 1st Army, Governors Is., N. Y.
Capt. J. H. York, Cp Campbell, Ky., to 2d Army, Edgewood Ars, Md.

The following TC officers are reld fr asgmt and dy, Cp Kilmer, N. J., and asgd to NOPE, New Orleans, La.:
Capt. W. N. Beauregard.
Capt. J. J. Hanculak.
Capt. R. N. Simerly, WAC.
Capt. T. Trainer.
1st Lt. R. D. Caughron.
1st Lt. O. B. Evans.
1st Lt. H. C. Peavy, jr.
2nd Lt. F. E. Fisher.
1st Lt. C. D. Bell, Ft. Dix, N. J., to Cp Kilmer, N. J.
1st Lt. D. J. Egan, Wash., D. C., to TC Repl Pool, Ft. Eustis, Va.
1st Lt. J. M. Harenza, Swannanoa, N. C., to QM Dep, Charlotte, N. C.
1st Lt. C. Hutson, Cp Atterbury, Ind., to RTC, Ft. Knox, Ky.
1st Lt. F. P. Pewinski, Ft. Dix, N. J., to Cp Kilmer, N. J.
1st Lt. G. L. Trombley, Cp Kilmer, N. J., to CIC Ctr Holabird Sig Dep, Baltimore, Md.
1st Lt. K. H. Jackson, Seattle, Wash., to 82d Abn Div, Ft. Bragg, N. C.
2nd Lt. D. L. Morgan, Ft. Dix, N. J., to SEPE, Seattle, Wash.

CORPS OF MILITARY POLICE

BRIG. GEN. B. M. BRYAN, PMG

Lt. Col. T. G. Bradlee, Ft. Dix, N. J., to PMGO, Wash., D. C.
Lt. Col. J. M. Emigh, Chicago, to Armd Forces Staff College, Norfolk, Va.
Lt. Col. George W. Haley, Wash., D. C., to Hqs 2d Army, Balto., Md.
Maj. W. C. Nutting, Ft. Riley, Kans., to 170th AAF BU, Brooke Fld., Tex.
Capt. W. F. Beiriger, Carlisle Bks, Pa., to Cp Kilmer, N. J.
Capt. J. H. Davis, Ft. Dix, N. J., to 4th Army 1857 ASU, Ft. Sam Houston, Tex.
Capt. E. C. Coffin, jr., Ft. Meade, Md., to RTC, Ft. Jackson, S. C.
Capt. B. W. Hedges, Ft. Riley, Kans., to 5th Army 728th MP Bn, Ft. Sheridan, Ill.
Capt. E. A. Johnson, Ft. Dix, N. J., to 7th Army 1453d ASU Miss Mil Dist, Jackson.
Capt. E. D. Miller, Pasadena, Calif., to 5th Army, Ft. Omaha, Nebr.
Capt. J. R. Robert, Los Angeles, Calif., to 6th Army Hq Sp Trps, San Francisco, Calif.
Capt. F. B. Winch, Wash., D. C., to Hq Air Materiel Comd, Wright Fld, Ohio.
1st Lt. E. J. Barattino, Phoenixville, Pa., to 712th MP Bn AWC, Wash., D. C.
1st Lt. J. J. Berg, Ft. Riley, Kans., to 5th Army 728th MP Bn, Ft. Sheridan, Ill.
1st Lt. O. M. Hagen, Ft. Dix, N. J., to 712th MP Bn AWC, Wash., D. C.
1st Lt. W. Legan, Carlisle Bks, Pa., to Cp Kilmer, N. J.
1st Lt. M. A. Mason, Ft. Riley, Kans., to 5th Army 728th MP Bn, Ft. Sheridan, Ill.
1st Lt. T. E. Minor, Carlisle Bks, Pa., to Cp Kilmer, N. J.
1st Lt. R. O. Nesbit, Ft. Oglethorpe, Ga., to 7th Army, Ft. McClellan, Ala.
1st Lt. M. Painter, Ft. Riley, Kans., to 5th Army 728th MP Bn, Ft. Sheridan, Ill.
1st Lt. H. H. Sheridan, Carlisle Bks, Pa., to 5th Army USDB, Ft. Leavenworth, Kans.
1st Lt. M. Zavatson, Ft. Riley, Kans., to 5th Army 728th MP Bn, Ft. Sheridan, Ill.
1st Lt. R. H. Grayson, Cp Kilmer, N. J., to NOPE, New Orleans, La.
1st Lt. J. R. Moses, Carlisle Bks, Pa., to OC of S, Wash., D. C.
2nd Lt. L. E. Page, Balto., Md., to 118th CIC Det, Holabird Sig Dep, Balto., Md.

WOMEN'S ARMY CORPS

COL. W. B. BOYCE, DIR.

Capt. U. M. Ankrom, Wash., D. C., to NOPE, New Orleans, La.
Capt. M. J. McFall, Ft. Knox, Ky., to NOPE, New Orleans, La.
Capt. M. E. McPherson, Springfield, Mo., to OC of S, Wash., D. C.
1st Lt. M. Heartt, Carlisle Bks, Pa., to Procurement and Integration Bureau, Wash., D. C.
1st Lt. E. F. Hoskins, Staten Is., N. Y., to NOPE, New Orleans, La.
1st Lt. M. E. Moran, Ft. Sheridan, Ill., to NOPE, New Orleans, La.
1st Lt. M. H. Price, Ft. Dix, N. J., to Hq 1st Army, Governors Is., N. Y.
1st Lt. I. M. Tucker, San Francisco, to SFPE, Ft. Mason, Calif.

Army of the United States

Lt. Col. V. C. Neeson, Balto., Md., to OC of S, Wash., D. C.
Capt. L. E. Carver, Ft. Sheridan, Ill., to 5th Army Ill Rctg Dist, Chicago, Ill.
1st Lt. J. Dolan, Balto., Md., to 108th CIC Det, 1st Army, NYC.
2nd Lt. E. G. Shafer, Ft. Dix, N. J., to 2d Army Rctg Sv, Indianapolis, Ind.

COLONELS REDUCED

Temp apmt as Col. AUS of the following officer terminated eff 15 Aug. and temp apmt eff 16 Aug. to the gr of Lt. Col. AUS with rank as specified:
W. A. Jennings, FA, 8 Feb. 1943.

FROM FOREIGN SERVICE

The following officers are asgd to dy at sta indicated eff upon compl of present tour of foreign sv:
CWO F. Davidson, USA, Sig C Repl Pool, Ft. Monmouth, N. J.
WOJG R. R. Durham, USA, Sig C Repl Pool, Ft. Monmouth, N. J.
Lt. Col. C. A. Murphy, FA, Hq First Army, Governors Is., N. Y.
CWO W. R. Sheppard, USA, Sig C Repl Pool, Ft. Monmouth, N. J.
Capt. W. E. Benoit, OD, ORP Aberdeen Pr Gr, Md.
1st Lt. J. H. Edney, MAC, MD RP Brooke AMC, Ft. Sam Houston, Tex.
Col. D. C. Hawkins, CE, EORP, Ft. Belvoir, Va.
Capt. C. E. Hazel, OD, ORP, Aberdeen Pr Gr, Md.
Capt. W. F. Roos, CE, EORP, Ft. Belvoir, Va.
Lt. Col. J. V. Sollohur, CE, EORP, Ft. Belvoir, Va.
1st Lt. L. E. Teale, Dietitian, MD RP Tilton GH, Ft. Dix, N. J.

TO OC OF S

The following officers are reld fr asgmt and dy indicated and asgd to OC of S, Wash., D. C.
Col. C. A. Harrington, AC, Fld Agencies WD Manpower Board, Atlanta, Ga.
Col. R. P. Eaton, Inf, Fld Agencies, WD Manpower Board, Omaha, Nebr.
Col. A. M. Sheets, FA, Fld Agencies, WD Manpower Board, Ft. Sam Houston, Tex.
Col. L. D. Syme, Inf., Fld Agencies WD Manpower Board, Balto., Md.
Col. H. E. Strickland, CAC, Fld Agencies WD Manpower Board, Balto., Md.
Col. C. E. Archer, AC, Fld Agencies WD Manpower Board, San Francisco, Calif.
Col. J. F. Barnes, FA, Fld Agencies WD Manpower Board, Atlanta, Ga.
Lt. Col. T. R. Bruce, FA, Fld Agencies WD Manpower Board, Balto., Md.
Lt. Col. K. S. Hand, SC, Fld Agencies WD Manpower Board, Balto., Md.
Lt. Col. J. S. Moncrief, jr., Inf., Fld Agencies WD Manpower Board, Atlanta, Ga.

CHIEF WARRANT OFFICERS

B. L. Beck, Cp Campbell, Ky., to 2d Army, Ft. Knox, Ky.
A. E. Chapman, Ft. Jackson, S. C., to 82d Abn Div, Ft. Bragg, N. C.
I. W. Deems, Ft. Dix, N. J., to Hq AGF, Ft. Monroe, Va.
P. R. Ensminger, Phoenixville, Pa., to 2d Army 2262d ASU, Phoenixville, Pa.
L. C. Clark, Ft. Sheridan, Ill., to Hq 5th Army, Chicago, Ill.
W. M. Dooley, Ft. Riley, Kans., to RTC, Ft. Ord, Calif.
L. J. Farina, Cp Campbell, Ky., to Hq 2d Army, Balto., Md.
C. M. Hagman, Ft. Riley, Kans., to RTC, Ft. Ord, Calif.
A. T. Huddon, Ft. Winfield Scott, Calif., to Hq 6th Army, San Francisco, Calif.
C. C. Mognett, Orlando AAB, Fla., to 7th Army, Fla Mil Dist, Jacksonville.
C. T. Nevling, Ft. Meade, Md., to Letterkenny Ord Dep, Chambersburg, Pa.
C. A. Graver, Ft. Sam Houston, Tex., to 4th Army Det Red River Ars, Texarkana, Tex.
E. Levins, Boston, to 1st Army, Ft. Banks, Mass.
W. H. Pinnell, Cp Campbell, Ky., to RTC, Ft. Knox, Ky.
L. E. Reedy, Cp Campbell, Ky., to Hq AGF, Ft. Monroe, Va.
W. T. Floyd, Ft. Bragg, N. C., to RTC, Ft. Jackson, S. C.
H. M. Marsh, Cp Atterbury, Ind., to 438th Band SFPE, Ft. Mason, Calif.

WARRANT OFFICERS (JG)

A. V. Cervellini, Ft. Tilden, N. Y., to 1st Army, Ft. Dix, N. J.
H. Chandler, Texarkana, Tex., to Research and Development Sv, Ft. Bliss, Tex.
H. M. Green, Ft. Bragg, N. C., to Hq 7th Army, Atlanta, Ga.
V. J. Lawler, Cp Polk, La., to Brooke AMC, Ft. Sam Houston, Tex.
W. L. Melott, Baltimore, Md., to 108th CIC Det Hq 1st Army, NYC.
E. A. Rehrig, Baltimore, Md., to 108th CIC Det Hq 1st Army, NYC.
F. I. Roberts, San Francisco, to RTC, Ft. Ord, Calif.
J. W. Scott, San Francisco, to 6th Army 6004 ASU Post, Ft. MacArthur, Calif.
V. A. Malone, San Francisco, to Hq 2d Inf Div, Ft. Lewis, Wash.
R. A. Seward, Cp Polk, La., to Brooke AMC, Ft. Sam Houston, Tex.
A. J. Pusateri, Dover, Del., to Holabird Sig Dep, Baltimore, Md.
P. F. Rhode, Baltimore, Md., to 112th CIC Det 4th Army, San Antonio, Tex.
D. R. Spratley, Tacoma, Wash., to AG Dep, Adm Ctr, St. Louis, Mo.

RETIRED

Col. A. Freer, MC, upon own app.
Col. J. R. Lowder (Lt. Col.) CAC, as Col., p.d.
Col. R. M. Shaw (Lt. Col.) Sig C, as Col., p.d.
Col. J. R.Skeldon (Capt.) AC, as Col., p.d.
Col. O. A. Eastwold, CWS.
Col. A. H. Skinner (Lt. Col.) Ord Dept., upon own app., as Col.
Col. J. W. Younger (Lt. Col.) QMC, as Brig. Gen., p.d.
Col. J. Carmack (Maj.) PC, as Col., p.d.
Col. J. T. Loome (Maj.) FA, as Brig. Gen., p.d.
Capt. K. E. Knabe, ANC.
Capt. M. A. Asen, ANC, p.d.
1st Lt. V. E. Morgan, ANC, p.d.
1st Lt. F. Petts, ANC, p.d.
1st Lt. M. Stoddart, ANC, p.d.
CWO E. B. Anderson, upon own app., after more than 29 yrs. sv.

(Please turn to Next Page)

Army Orders

(Continued from Preceding Page)

CWO W. T. French (WOJG) as WOJG, p.d.
WOJG H. C. Finley, upon own app., after more than 21 yrs sv.
WOJG V. Slater, upon own app., after more than 26 yrs sv.
1st Lt. E. Johnson, Inf.
2nd Lt. P. F. Mollerstrom.
2nd Lt. V. H. Hirsch, QMC.

RESIGNED

Lt. Col. A. D. Arnold (1st Lt.) CE.
Lt. Col. I. R. Long (Capt.) MC.
Capt. W. C. Doak, MC.
Capt. D. West, III (1st Lt.) Sig C.
1st Lt. F. X. Munsch, jr. (2nd Lt.) PC.

ORDERS TO RETIRED OFFICERS

CWO W. T. French (WOJG) advanced on the ret list to the rank of Capt.

CHANGE OF NAME

Capt. Neva H. Barnes, WAC, to Neva Barnes Maiser.
Capt. Arthur Bartzocas, AC, to Arthur C. Barton.
Capt. Ethel L. Blaine, ANC, to Ethel Blaine Millett.
1st Lt. Morris Kaplan, CMP, to Morris Kiel.
1st Lt. Kai L. Lee, DC, to David L. Lee.
1st Lt. Eleanor M. Straubel, ANC, to Eleanor Mae Slade.
1st Lt. Edward Joseph Szafarowicz, AC, to Edward Joseph Farow.
Lt. Col. Pacifico C. Sevilla, CAC, to Pacifico Castor Sevilla.
Maj. Maxie Thurmond, Cav, to Maxwell Bryant Thurmond.
Capt. Gladys Katherine Huber, WAC, to Gladys Katherine Huber Wetherell.
Capt. Manuel H. Shapiro, SC, to James Manuel Herbert Sherwood.
1st Lt. Gwendolyn L. Henshaw, ANC, to Gwendolyn Henshaw Perrine.
1st Lt. Calixto Valencia Salva, Inf, to Calvin V. Salva.

TO ARMED FORCES STAFF COLLEGE

The following officers are reld fr asgmt and dy at sta indicated and atchd unasgd to Stu Det Armed Forces Staff College, Norfolk, Va.:
Lt. Col. F. Caraway, Inf., Hq AGF, Ft. Monroe, Va.
Lt. Col. W. E. Maulsby, jr., Inf., Hq AGF, Ft. Monroe, Va.
Lt. Col. L. J. Hillberg, CAC, Hq AGF, Ft. Monroe, Va.
Lt. Col. J. A. Channon, FA, Hq AGF, Ft. Monroe, Va.
Col. G. S. Speidel, jr., FA, AGF Board No. 1, Ft. Bragg, N. C.
Col. T. Bogart, Inf., 2d Inf. Div., Ft. Lewis, Wash.
Lt. Col. L. S. Bork, Inf., Hq Second Army, Baltimore, Md.
Col. C. H. Clarke, jr., Inf., OC of S, Wash., D. C.
Col. C. R. Cochran, Inf., Office Dir of Pers and Adm, Wash., D. C.
Lt. Col. J. B. Coolidge, Inf., OC of S, Wash., D. C.
Col. A. D. MacLean, (Inf.) GSC, OC of S, Wash., D. C.
Col. S. E. Mays, Inf., Hq Seventh Army, Atlanta, Ga.
Col. C. N. Hunter, Inf., Hq AGF, Ft. Monroe, Va.
Lt. Col. L. H. Smith, (Inf.) GSC, OC of S, Wash., D. C.
Col. T. R. Stoughton, Inf., 3d Inf. Div, Cp Campbell, Ky.
Lt. Col. J. B. Sullivan, Inf., Hq AGF, Ft. Monroe, Va.
Lt. Col. P. O. Ward, Inf., OC of S, Wash., D. C.
Lt. Col. S. F. Crawford, FA, The Arty Sch, Ft. Sill, Okla.
Lt. Col. W. W. Sisson, FA, USMA, West Point, N. Y.
Col. J. E. Thelmer, FA, Mine Base Naval Operations Base, Little Creek, Va.
Col. W. A. Hampton, CAC, Seacoast Br the Arty Sch, Ft. Winfield Scott, Calif.
Col. C. G. Patterson, CAC, Hq First Army, Governors Island, N. Y.
Col. T. V. Stayton, CAC, USMA, West Point, N. Y.
Col. W. E. Finnegan, Cav., Hq Sec Army, Coronado, San Diego, Calif.
Col. W. H. Hunter (Cav.) GSC, OC of S, Wash., D. C.
Col. D. W. Johnston, jr., (Cav.) GSC, OC of S, Wash., D. C.
Col. H. V. Mitchell, (Inf.) GSC, OC of S, Wash., D. C.
Lt. Col. L. J. Schultheis, (FA) GSC, OC of S, Wash., D. C.

ALERTED FOR OVERSEAS
To AFPAC, Yokohama, Japan

1st Lt. William H. Belky, CMP.
Capt. Varley F. Broe, CMP.
Capt. William R. Caldwell, CMP.
Capt. Frank H. Campbell, CMP.
Capt. Robert E. Carroll, CMP.
Capt. Frank G. Carson, CMP.
Capt. George J. Cola, CMP.
Maj. Eli H. Crowell, CMP.
1st Lt. Donald E. Gresham, CMP.
1st Lt. William L. Hill, CMP.
Capt. Frank Johnston, CMP.
Capt. Arthur F. Luther, CMP.
1st Lt. Edwin A. Mayo, CMP.
Capt. Donald R. Nall, CMP.
1st Lt. Robert A. Nelson, CMP.
Capt. Frank P. Ross, CMP.
1st Lt. Clarence W. Senser, CMP.
2nd Lt. W. Albrecht.
2nd Lt. R. A. Ashworth.
2nd Lt. J. A. Baker, jr.
2nd Lt. E. W. Bassick.
2nd Lt. G. R. Beiser.
2nd Lt. H. I. Benner.
2nd Lt. J. C. Bennett, jr.
2nd Lt. D. L. Bills.
2nd Lt. J. I. Bobbitt.
2nd Lt. N. D. Bradshaw.
2nd Lt. G. E. Brown.
2nd Lt. E. J. Buck.
2nd Lt. R. J. Butler.
2nd Lt. K. T. Campbell, jr.
2nd Lt. C. L. Carsten.
2nd Lt. T. F. Clendenin.
2nd Lt. D. L. Coker.
2nd Lt. R. W. Cook.
2nd Lt. W. M. Crandall, jr.
2nd Lt. P. Cullen.
2nd Lt. P. R. Curry, jr.
2nd Lt. R. J. Czaja.
2nd Lt. R. E. Daniels.
2nd Lt. J. Dekker.
2nd Lt. M. E. Dowd.
2nd Lt. L. C. Edwards.
2nd Lt. N. B. Fidler, jr.
2nd Lt. J. R. Franco, jr.
2nd Lt. A. Frank.
2nd Lt. D. W. Freyberg.
2nd Lt. B. A. Gallagher, jr.
2nd Lt. R. P. Geary.
2nd Lt. J. C. Gill.
2nd Lt. H. H. Glidden, jr.
2nd Lt. H. W. Gray, jr.
2nd Lt. W. E. Greene, jr.
2nd Lt. P. G. Grotelueschen.
2nd Lt. M. D. Healy.
2nd Lt. L. M. Herbertson.
2nd Lt. W. C. Henry.
2nd Lt. D. H. Hunter.
2nd Lt. C. W. Immler.
2nd Lt. F. W. Indzonka.
2nd Lt. W. N. Irving.
2nd Lt. H. G. Jackson, jr.
2nd Lt. H. E. Jagerman.
2nd Lt. R. H. Jamieson.
2nd Lt. D. C. Johnson.
2nd Lt. C. D. Kern.
2nd Lt. W. W. Kinkead.
2nd Lt. A. B. Kisielius.
2nd Lt. W. E. Knox.
2nd Lt. W. F. Koeckert.
2nd Lt. C. A. Kramer.
2nd Lt. R. V. Lambert.
2nd Lt. J. W. Ledbetter.
2nd Lt. F. Lee.
2nd Lt. R. L. Le Long.
2nd W. F. Lindsey.
2nd Lt. T. M. Longino, jr.
2nd E. L. Loomis.
2nd Lt. K. E. Mayer.
2nd K. J. McElroy, jr.
2nd Lt. M. S. McGinnis.
2nd Lt. R. D. McLaren.
2nd Lt. R. L. McLaughlin.
2nd Lt. E. H. Metz.
2nd D. H. Money.
2nd Lt. E. E. Monger.
2nd Lt. J. K. Moulton.
2nd Lt. J. M. Natalonl.
2nd Lt. J. D. Olson.
2nd Lt. J. J. Ondishko, jr.
2nd Lt. P. A. Oostmeyer.
2nd Lt. W. M. Peden.
2nd Lt. M. A. Ponti, jr.
2nd Lt. W. B. Ray.
2nd Lt. C. W. Rhoda, jr.
2nd Lt. R. R. Robbins.
2nd Lt. G. A. Roberts.
2nd Lt. P. R. Rothrock.
2nd Lt. S. T. Ryan.
2nd Lt. W. H. Schneidewind.
2nd Lt. M. C. Sednaoui.
2nd Lt. E. C. Sheppeck.
2nd Lt. A. F. Silveira.
2nd Lt. C. A. Smith.
2nd Lt. G. B. Smith, jr.
2nd Lt. Neland E. Smith.
2nd Lt. S. W. Stevenson, jr.
2nd Lt. J. M. Strong, jr.
2nd Lt. R. D. Thorp.
2nd Lt. H. L. Tilson.
2nd Lt. G. E. Veltri.
2nd Lt. H. L. Walker.
2nd Lt. J. M. Wells.
2nd Lt. W. Welp.
2nd Lt. W. B. Williams.
2nd Lt. W. A. Windrum.
2nd Lt. E. H. Wood, jr.
1st Lt. R. W. Bowers, QMC.
2nd Lt. W. L. Gibson, QMC.
1st Lt. M. Hewlin, QMC.
Capt. F. J. Kennedy, QMC.
Capt. W. H. Killian, QMC.
Capt. J. V. Mazza, QMC.
Capt. W. C. McConnell, QMC.
Capt. John T. Mullarkey, QMC.
Maj. O. A. Olson, QMC.
Capt. M. W. Ormes, QMC.
2nd Lt. W. H. Pryor, QMC.
Capt. L. M. Pursley, QMC.
Maj. R. E. Roberts, QMC.
1st Lt. L. G. Weston, QMC.
1st Lt. J. L. Woods, QMC.
1st Lt. L. J. Hinytz, Ord Dept.
1st Lt. P. B. Lewis, QMC.
1st Lt. H. H. Paschall, QMC.
1st Lt. C. H. Russell, QMC.
Maj. F. J. Lacy, TC.
1st Lt. L. R. Schnirch, TC.
Capt. E. F. Brown, Inf.
Maj. LeR. D. Brummitt, Inf.
Col. W. C. Deware, Inf.
Capt. H. C. Dewoody, Inf.
1st Lt. M. Dobransky, Inf.
Capt. E. C. Dudley, Inf.
Capt. L. R. Dunham, Inf.
Lt. Col. G. B. Goodrich, Inf.
Capt. P. M. Guntharp, Inf.
Capt. S. T. Iversen, Inf.
1st Lt. G. Johnson, Inf.
Maj. J. W. Lorio, Inf.
Capt. P. H. Mackey, Inf.
1st Lt. W. E. Maxwell, Inf.
1st Lt. O. E. Morris, Inf.
1st Lt. J. W. Morrison, Inf.
Capt. R. B. Nett, Inf.
1st Lt. C. H. Propst, Inf.
Capt. J. C. Raymond, Inf.
Capt. P. A. Reeder, Inf.
Lt. Col. F. C. Seitz, Inf.
Col. P. E. Tombaugh, Inf.
Ch (Capt.) S. B. Phillips, USA.
1st Lt. P. W. Allison, CAC.
1st Lt. O. W. Anderson, CAC.
2nd Lt. R. R. Becks, CAC.
1st Lt. J. J. Berg, CAC.
Capt. C. W. Bright, CAC.
1st Lt. G. C. Clover, CAC.
1st Lt. J. C. Crawford, jr., CAC.
1st Lt. E. LeR. Denniston, CAC.
Capt. H. E. Eisenhart, CAC.
Capt. T. R. Esatow, CAC.
Maj. R. Farr, CAC.
1st Lt. R. Field, CAC.
1st Lt. H. Grabowski, CAC.
Capt. N. E. Hallowell, CAC.
1st Lt. G. C. Hanes, CAC.
Maj. C. J. Hutson, CAC.
2nd Lt. D. L. King, jr., CAC.
Capt. G. G. Kirton, CAC.
1st Lt. H. W. Kreuger, CAC.
Maj. T. R. Lea, jr., CAC.
Maj. M. J. Lechwar, CAC.
1st Lt. W. Lescarbeau, CAC.
Capt. O. B. Lewis, CAC.
1st Lt. R. W. Martin, CAC.
Capt. R. J. McCrory, CAC.
Maj. D. B. McFadden, jr., CAC.
Capt. G. C. Meyer, CAC.
Capt. S. R. Mohn, CAC.
1st Lt. R. G. Pagnello, CAC.
1st Lt. M. L. Quattlebaum, CAC.
Capt. D. M. Recksiek, CAC.
1st Lt. K. G. Ring, CAC.
Capt. C. J. Schell, CAC.
1st Lt. J. O. Schurtz, CAC.
1st Lt. J. E. Sigler, CAC.
Lt. Col. R. A. Stevens, CAC.
Capt. G. G. Tillery, CAC.
1st Lt. C. F. Tuttle, jr., CAC.
1st Lt. G. J. Wadlow, CAC.
Capt. H. D. Waters, CAC.
Capt. C. J. Wright, jr., CAC.
Capt. W. E. Gott, PC.
Col. J. F. Davis, Cav.
Capt. J. B. Childres, CMP.
Maj. J. P. Joyce, OD.
1st Lt. M. Kennedy, CMP.
Capt. A. A. Levine, CMP.
2nd Lt. M. Mayer, CMP.
Maj. J. E. Moore, CMP.
Capt. L. R. Rawls, CMP.
Capt. W. A. Royal, CMP.
Maj. S. F. Tate, jr., CE.
1st Lt. C. G. Toler, CMP.
CWO F. V. Amodel, USA.
CWO L. H. Buckner, USA.
WOJG E. G. Brewer.
CWO A. F. Corbett.
CWO J. S. Hart.
WOJG S. R. Kinder.
CWO W. C. Lipe.
CWO C. E. McElwain.
CWO L. G. Perry.
WOJG F. Phillips.
CWO A. Russell.
CWO C. H. Shannon.
Capt. J. C. Allen, SC.
1st Lt. T. M. Baker, SC.
1st Lt. J. A. Bongard, SC.
1st Lt. P. Brillman, SC.
Capt. G. A. Broms, SC.
1st Lt. D. F. Brown, SC.
Lt. (jg) J. B. Bruton, USNR.
1st Lt. R. H. Caughman, SC.
2d Lt. Earle E. Caves, SC.
Capt. Edwin J. Chatham, SC.
Capt. Bernard D. Clifford, SC.
Capt. Owen M. Conrad, SC.
Capt. Henry J. Cozine, SC.
1st Lt. James J. Cross.
1st Lt. John B. Cullen, SC.
Capt. Thomas F. Darnell, SC.
Capt. Albert Diamond, SC.
1st Lt. Joseph A. Doyle, SC.
Capt. John Dugger, SC.
Maj. Deane A. Dunloy, SC.
1st Lt. Gustave Dwyer, SC.
Capt. Dominick Ferrara, SC.
Capt. Joseph C. Fiolek, SC.
Capt. Elwood Fisher, SC.
1st Lt. James R. Fout, SC.
1st Lt. William R. Frank, SC.
Capt. Simons S. Golden, SC.
Capt. Carl J. Gunkel, SC.
Capt. Dennis Hall, SC.
Capt. Russell A. Harder, SC.
1st Lt. Ralph E. Hill, SC.
Capt. Earl H. Holland, SC.
1st Lt. Howard G. Jackson, SC.
1st Lt. Oscar H. R. Jett, SC.
Maj. Lyle M. Jones, SC.
Capt. Leo Kane, SC.
Capt. Gerard T. Kenny, SC.
Capt. Charles R. Knoeller, SC.
Capt. Vincent D. Kohler, jr., SC.
1st Lt. Samuel Kreps, SC.
1st Lt. Larry C. Lovelace, SC.
Capt. John G. Mabbatt, SC.
2d Lt. Carl D. Marrs, SC.
Capt. John F. McAuliffe, SC.
1st Lt. John D. McDougall, SC.
1st Lt. George Menzie, SC.
1st Lt. James A. Moree, SC.
Maj. Irving Moskowitz, SC.
Capt. Edwin L. Mueller, SC.
1st Lt. G. D. Nicholas, QMC.
Capt. H. A. Okie, Sig C.
1st Lt. W. T. Parks, Sig C.
1st Lt. C. H. Parrish, Sig C.
Capt. W. H. Prince, Sig C.
2nd Lt. H. W. Richardson, Sig C.
1st Lt. R. L. Robberson, Sig C.
Capt. J. P. Schatz, Sig C.
Maj. E. C. Smith, Sig C.
Capt. G. E. Smith, Sig C.
1st Lt. L. W. Smith, Sig C.
1st Lt. S. Spector, Sig C.
1st Lt. W. C. St. George, Sig C.
1st Lt. M. J. Strally, Sig C.
Capt. C. F. Traeger, Sig C.
1st Lt. H. N. Truly, DC.
1st Lt. D. D. Tuning, Sig C.
Capt. D. M. Uhler, Sig C.
Capt. J. P. Vargo, Sig C.
1st Lt. E. B. Waddell, Sig C.
Capt. R. W. Walker, Sig C.
1st Lt. R. A. Wood, Sig C.
1st Lt. J. E. Worthington, Sig C.
WOJG W. R. Billings, USA.
WOJG R. E. Hodges, USA.
WOJG G. C. LaBuda, USA.
WOJG E. A. Rockwell, USA.
WOJG W. A. Schlick, USA.
WOJG V. P. Visconti, USA.
Capt. R. Bello, QMC.
1st Lt. N. A. Bivens, QMC.
Maj. R. J. Brenner, QMC.
Maj. H. O. Bruce, QMC.
1st Lt. D. P. Burr, QMC.
1st Lt. Kendall W. Coen, QMC.
1st Lt. Ray H. Curry, QMC.
Capt. James E. Davis, QMC.
Capt. Frank L. Deditz, QMC.
1st Lt. Charles W. Eckles, QMC.
2d Lt. Donald E. Ewing, QMC.
1st Lt. Henry B. Flack, QMC.
1st Lt. Elmer M. Froman, QMC.
Capt. William R. Gaffney, QMC.
1st Lt. Oliver J. Gundrich, QMC.
1st Lt. Albert C. Hale, QMC.
Capt. Harold W. Hipp, QMC.
Col. Henry R. Johnson, QMC.
Lt. Col. Russell S. Johnston, QMC.
Maj. Charles C. Jones, QMC.
Capt. Hiram F. Jones, QMC.
Capt. William C. Jones, QMC.
Capt. Karl Kemp, QMC.
2d Lt. Ernest L. Kettley, QMC.
2d Lt. Robert J. Blundy, QMC.
Capt. Vincent R. McCooey, QMC.
1st Lt. James F. McIntosh, QMC.
1st Lt. Alexander S. Mackenzie, QMC.
Lt. Col. Slater E. Marshall, QMC.
1st Lt. Wade W. Marsh, QMC.
1st Lt. Roy B. Meyer, QMC.
1st Lt. Lloyd G. Miller, QMC.
Capt. Paul J. Miller, QMC.
Capt. Robert E. Miller, QMC.
Capt. Raymond C. Morrison, QMC.
Lt. Col. Milton E. Muller, QMC.
2d Lt. Vincent Nacci, QMC.
Maj. Elmer J. Neary, QMC.
Capt. Samuel C. Nethery, QMC.
2d Lt. James J. Nichol, QMC.
1st Lt. Wilburn H. Ohle, QMC.
Capt. Charles A. Palmer, QMC.
Capt. Don R. Parsons, QMC.
1st Lt. Rudolph H. Pestalozzi, QMC.
1st Lt. Edward N. Phillips, QMC.
Capt. Robert J. Phillips, QMC.
1st Lt. Chester Pleczynski, QMC.
Capt. Lott W. Price, QMC.
Capt. Thomas M. Price, QMC.
1st Lt. Morton Rabinowitz, QMC.
Maj. John E. Racek, QMC.
Capt. Patrick M. Reid, QMC.
1st Lt. John F. Reilly, QMC.
1st Lt. Ernest L. Rubottom, QMC.
1st Lt. Paul S. Russell, QMC.
1st Lt. Kenneth R. Sanchez, QMC.
Capt. Tom B. Setze, QMC.
1st Lt. Herman J. Shelby, QMC.
1st Lt. Charles W. Siegfried, QMC.
1st Lt. Richard E. Smith, QMC.
Lt. Col. Richard J. Spurr, QMC.
Maj. Paul B. Steinke, QMC.
Lt. Col. Mathias C. Trub, QMC.
1st Lt. Sam H. Tucker, QMC.
Maj. Jesse W. Varian, QMC.
Maj. Edward F. Vogt, QMC.
Maj. John M. Williams, QMC.
1st Lt. Walter W. Wilson, QMC.
Capt. Francis V. Abell, AUS.
1st Lt. John H. Adams, AUS.
1st Lt. Edwin F. Barber, OD.
Capt. Lester R. Boren, AUS.
Capt. Clifford A. Brown, AUS.
Capt. Chester E. Carter, AUS.
Capt. Alva J. Coats, AUS.
1st Lt. Richard H. Coney, AUS.
1st Lt. Anthony A. D'Aniello, AUS.
Capt. Samuel T. Denton, AUS.
1st Lt. Cecil F. DeVilbiss, AUS.
Capt. James G. Dunton, AUS.
Capt. Archer P. Farmer, OD.
1st Lt. Andrew J. Fintt, AUS.
1st Lt. Alfred Fulton, CMP.
Capt. John M. Gaunt, AUS.
Lt. Col. Calvin H. Goddard, OD.
Maj. John Grado, AUS.
2d Lt. Julius E. Grass, AUS.

(Please turn to Page 390)

SERVICE SOCIAL NEWS

THE Secretary of War and Mrs. Patterson, the Secretary of the Navy and Mrs. Forrestal, the former Secretary of War and Mrs. Harry Woodring were guests of the President and Mrs. Truman at the third of a series of state dinners at the White House Tuesday evening, the party named the "Cabinet Dinner," as the chief guests are made up of the President's official family, all of whom were present with the exception of Postmaster General Hannegan who is resting in Florida.

In the "Little Cabinet" circle there were the Under Secretary of War and Mrs. Kenneth Royall. Some others were Maj. Gen. Philip Fleming, and Mrs. Fleming, Maj. Gen. and Mrs. Robert McG. Littlejohn, Col. Don Lowery and Comdr. and Mrs. B. Harrison Lingo, whose daughter, Jane, is an intimate friend of Miss Margaret Truman, the President's daughter, who was also present at her first of state functions. Many distinguished guests from civilian life were present, the company filling the state dining room.

—o—

Morrison Field Officers' Wives Woman's Club is becoming very active under the leadership of the Base Commander's wife, Mrs. Thomas D. Ferguson. One of the best get-together parties was held 9 November, "Sadie Hawkins Day." There are plans being made by the Club for a huge New Year's party now. There are all kinds of activities going on, such as weekly bowling, horseback riding, tennis, golf and bridge playing. The Club is very active in the N.A.A.F.W. and works weekly with the Red Cross as nurses' aids and staff assistants.

—o—

The former Secretary of War and Mrs. Harry Woodring spent a few days in Washington this past week, coming on from their home in Topeka, Kans., he to attend the Gridiron Dinner. Mrs. Woodring was a guest at the reception for the Duke and Duchess of Windsor given by the American Newspaper Women's Club.

—o—

Col. Frank A. Allen, jr., formerly in command of the Seine area in France, was host to the Duke of Windsor at a luncheon and golf game at the Chevy Chase Club, in the luncheon company being Maj. Gen. Stephen J. Chamberlin, Maj. Gen. Albert C. Kenner, Maj. Gen. W. B. Persons, Maj. Gen. Gasser, Brig. Gen. Samuel D. Sturgis, Col. Ben. G. Crosby and others.

—o—

Rear Adm. and Mrs. Herbert S. Howard are to have a family house party for Christmas. Their daughter, Maisie, Mrs. Anthony Balloch and month old Patricia Ann, will welcome the latter's father, Mr. Balloch, who will remain until after the holidays and then take his family to Newfoundland for residence. Lt. Macauley Howard, USN, whose ship is docked in Boston will be here for the reunion and his fiancee, Miss Mary Clifford Sharp, daughter of Mr. and Mrs. Robert Sharp of London, also will be of the party. Mr. Herbert Seymour Howard, jr., who served in the Navy during the war is coming down also from New York with his wife.

—o—

A recent social event of interest to Bolling Field was a cocktail party given at the Officers' Club on Wednesday evening, 18 December, by Mrs. Hall, wife of Col. Robert W. Hall, Mrs. Slayden, wife of Lt. Col. Van H. Slayden, and Mrs. James E. Altman, wife of Lt. Col. Altman. The club was decorated in the spirit of Christmas with sprigs of holly and mistletoe and highlighted by a gigantic and colorful Christmas tree.

Among the guests were: Brig. Gen. and Mrs. B. M. Hovey (Commanding General of Bolling Field); Col. and Mrs. W. R. Grohs, Col. and Mrs. J. T. Hills, Col. and Mrs. D. J. Moler, Col. and Mrs. O. M. Lopez, Col. and Mrs. William Boknaker, Col. and Mrs. James Mayden, Col. and Mrs. John Ulrickson, Col. and Mrs. Danial Calahan, Col. Harold K. Roberts, Commander and Mrs. A. W. Slayden, Commander and Mrs. William Klees, Col. and Mrs. D. M. Ellis III (Ret.—father of Mrs. Altman); Col. D. M. Ellis IV (brother of Mrs. Altman); Lt. Col. and Mrs. H. F. Funsch, Lt. Col. and Mrs. Eugene Rovegno, Lt. Col. and Mrs. M. F. Ritterbush, Lt. Col. and Mrs. J. H. King, jr., Lt. Col. and Mrs. B. L. Brown, Maj. and Mrs. Van der Veer, Maj. and Mrs. L. W. Berger, Maj. and Mrs. J. S. Bowers, jr., Maj. and Mrs. T. F. Peters, Maj. and Mrs. J. G. St. Lawrence, Maj. and Mrs. D. D. Greelis, Maj. and Mrs. J. D. Nichols, jr., Maj. and Mrs. Joseph Manyo, Maj. and Mrs. Thomas J. Milburn, Maj. and Mrs. Y. A. Pitts, jr., Maj. and Mrs. W. B. Broame, jr., Maj. George Howard, Maj. and Mrs. Frank Cummings, Chaplain and Mrs. T. E. Pardue, jr., Chaplain N. E. Selzler, Capt. and Mrs. C. F. Strodbeck, Capt. and Mrs. R. M. Garrett, Capt. H. L. Heintzelman, Capt. W. J. Lookadoo, Capt. and Mrs. P. J. Curtis, Capt. and Mrs. T. H. Brown, Capt. and Mrs. G. F. Bradburn, Capt. F. D. Van Valkenburg, Capt. and Mrs. R. L. Ramer, Capt. P. V. H. Weems, CWO and Mrs. J. J. Leanard, Mrs. Swede Larson, Miss Dorothy O'Shea, Mr. and Mrs. Gaines H. Gough, Mr. and Mrs. George F. Beyer, Mr. and Mrs. Donald S. Bittinger, Miss Margaret Talley (Lakeland, Fla.).

—o—

More than 150 civilian and military members of the San Antonio chapter of the Quartermaster Assn. met at the San Antonio General Depot, Fort Sam Houston, Monday night for a buffet supper and business meeting, Col. Mark V. Brunson, Fourth Army Quartermaster and chapter president announced.

Maj. Thor S. Anderson and Maj. W. S. Filler, both of Fourth Army's Quartermaster Section, addressed the group.

—o—

A group of Army and Navy relics who are sequestered in or near Albemarle County, in Virginia, gathered together at the Keswick Hunt Club on Saturday, 7 Dec.

A peaceful, though enjoyable, evening was spent discussing matters largely rural and agricultural.

This group consists of the following: General and Mrs. Philip B. Peyton of High Dudgeon; General and Mrs. Fred Wallace of Fairmount; General and Mrs. Cuthbert P. Stearns of Dismount; Capt. and Mrs. Hilary H. Royall of Shadwell; Capt. and Mrs. Edgar M. Williams of Harwill; Col. and Mrs. Bernard Peyton of Yelverton; Capt. and Mrs. Roswell H. Blair of East Hundred; Capt. and Mrs. Samuel H. Hurt of Charlottesville; Col. and Mrs. F. R. Chamberlain of Rockwell; Capt. and Mrs. Charles R. Irving of The Union; Comdr. and Mrs. John C. Stewart of Harkaway; Comdr. and Mrs. Thomas M. Carruthers of Charlottesville; and

(*Please turn to Page* 390)

MRS. JOSEPH E. O'LEARY, the former Miss Rosemary Walker, daughter of Col. and Mrs. Isaac G. Walker, whose marriage took place at Kyoto Honchu, Japan, recently.

Weddings and Engagements

VICE Adm. and Mrs. Lyal A. Davidson of Washington, D. C., announce the engagement of their daughter, Judith Ament, to Maj. Anthony Walker, USMC, son of Mr. and Mrs. John R. Walker, also of Washington.

Miss Davidson was born in Norfolk, and is a graduate of Sweet Briar College. She is a member of Tau Omicron Phi Sorority and has been active in the JANGO during the past year. Her grandparents were Mr. and Mrs. William Watts Gwathmey of Norfolk and Col. and Mrs. Joseph T. Davidson of Iowa. She is the great granddaughter of the late John D. Langhorne of Washington.

Major Walker was born in Fairfax County, Va. He attended Greenwich Country Day School and Berkshire School in New England and Yale University, Class of 1939. Upon graduation from Yale he enlisted in the Marine Corps, won his commission and saw three years service in the Pacific. He was awarded two Silver Star Medals and the Purple Heart. Major Walker's present station is at Quantico.

—o—

Capt. Hollis Moseley Cooley, USN-Ret., of Wardour, Annapolis, has announced the engagement of his daughter, Miss Virginia Welbourn Cooley, to Lt. Richard Eugene Bowe, USN, son of Mr. and Mrs. Hugh H. Bowe, South Woodslee, Ontario, Canada.

Miss Cooley, daughter of the late Mrs. Cooley, who was Miss Edloc Welbourn, of Baltimore, attended St. Catherine's School and was graduated from Gunston Hall. She made her debut at the Bachelors' Cotillon in 1942.

Lieutenant Bowe attended the University of Michigan and was graduated from the United States Naval Academy, class of 1944.

—o—

Miss Helen Edith Osmun, daughter of Col. and Mrs. R. A. Osmun, USA-Ret., of 105 Albermarle St., Westmoreland Hills, Washington, D. C., was married to Mr. Pierre Edward Parker, son of Mrs. Louis Bogert (and the late Mr. Parker) of New York, in the Chevy Chase Presbyterian Church, Washington at three o'clock 7 Dec., by the Rev. Dr. Leonard.

The bride was given in marriage by her father, Colonel Osmun. The church decorations were ferns and bronze chrysanthemums.

The bride's costume was white jersey, long train, princess lines, long sleeves; insets of Belgian rose point lace at neckline; cap of same lace as used for insets; full length veil. She carried a bouquet of white roses and bouvardia.

The matron of honor was Mrs. Earle W. Jennings. The bride's other attendants were Miss Dorothy D. Comstock and Miss Yvonne Antignat, a cousin of the groom.

The best man was Mr. George Schriever of St. Louis, Mo. The ushers were Mr. Walter Jessel, Mr. Raymond Antignat, cousin of the groom and Mr. Jack Cluzel, cousin of the groom.

The wedding was followed by a reception at the home of the bride's parents, after which the happy couple left by automobile for a tour of the Eastern states. At the conclusion of this tour they will return to Washington, where they expect to make their home.

The bride was born and brought up in the Army and as a result has traveled extensively, not only in this country but abroad. She graduated from the Radford School for Girls at El Paso, Tex., and from Swarthmore College, Pa. After an intensive supplementary secretarial course taken simultaneously in English, French and Spanish, Miss Osmun volunteered for war work which eventually included important assignments in military activities in Africa and England. It was during this overseas service that the future bride and groom first met.

The groom was graduated from the University of California at Berkeley, and engaged in the practice of his chosen profession of petroleum geology, including a long period in Venezuela. At the outbreak of war he resigned his position, returned to the United States and voluntarily enlisted in the Army as a private. However, because of his specialized professional and language qualifications, he was promptly assigned to special military activities which took him overseas to service in Italy, France and England, and his eventual meeting with his bride-to-be.

—o—

Miss Mae Wynn Elkins, daughter of Col. and Mrs. Stephen B. Elkins, First Army of Governors Island, N. Y., was married Sunday afternoon 15 Dec. to Maj. Lawrence C. Radford, DC, son of Mrs. Roy C. Radford and the late Mr. Roy C. Radford of Minneapolis, Minn. The wedding took place in the historic chapel of St. Cornelius the Centurion on Governors Island. Chaplain Julian S. Ellenburg officiated. The bride was given in marriage by her father and a large reception followed the ceremony at the Officers' Club.

The bride wore a gown of ivory satin. A double finger-tip tulle veil attached to a crown studded with seed pearls and she carried a bouquet of white gladioli and camellias.

Miss Patricia McCormick was maid of honor. The bridesmaids were: Miss Patricia Molony and Miss E. Glenmore Thompson of Governors Island, and Miss Gloria McAlister.

Capt. Lester H. Woldum of Minneapolis, was best man. The ushers were: Lt. Col. Milton L. Rosen, Lt. Col. Stephen A. Radford, Maj. Seymour Howard, Capt. Jordan of West Point, Capt. Emerson Heinz and Lt. Berl Brewington of Governors Island. The ring bearer was Master Bradford Luke, son of Lt. Col. and Mrs. Regis Luke of Governors Island.

Upon return from their wedding trip at the Homestead, Hot Springs, Va., Major Radford and his bride will live in New York City.

The bride was born in Columbus, Ga. She attended the University of Hawaii. Major Radford was graduated from the University of Minnesota and is a member of Sigma Alpha Epsilon. He spent fourteen months in the China-Burma-India Theatre at Calcutta. His present station is the U. S. Army Dispensary, New York City.

—o—

Mrs. John Fleming of Key West, Fla., announces the engagement of her daughter, Dorothy Mae Dungan, to Lt. Richard Galt Zimermann, USN, son of Capt. Alfred G. Zimermann, USN-Ret., and Mrs. Zimermann, of Washington, D. C.

Miss Dungan is a graduate of the Florida State College for Women and is a member of Zeta Tau Alpha Sorority. At present she is on the faculty of Harris School in Key West.

Lieutenant Zimermann attended the Meade School at San Marino, Calif., and Western High School, Washington, D. C., graduating from the U. S. Naval Academy in 1942. He was awarded the Commendation Ribbon for action in the Invasion of Normandy and the Silver Star for gallantry off Okinawa. He was gunnery officer of the USS Wadsworth during the period for which that vessel was awarded the Presidential Unit Citation. He is now Executive Officer of the Destroyer Escort Alexander J. Luke.

He is the grandson of the late Capt. William W. Galt, USN and Mrs. Galt of Norfolk, Va.

—o—

In the Cadet Chapel at West Point on Sunday, 1 Dec., Chaplain John B. Walthour baptized little Katharine Mary Gunster, born 7 Nov. to Lt. Col. and Mrs. Walter E. Gunster, jr. Coming north for the occasion were Miss Mary Helen Gunster of 3700 Bay Shore Drive, Sarasota, Fla., and Col. and Mrs. Charles L. Steel, maternal grandparents, of 7211 Fifth Ave., South, St. Petersburg, Fla. Colonel Steel was recently retired from the Army after 30 years' service with the Infantry. The Godparents of baby Katharine are Mrs. William H. Corbett, Mrs. Charles J. Denholm, and Maj. Donald B. Stewart. Cadet James H. Steel, uncle of the baby, was Proxy-Godfather for Major Stewart who is stationed at Ft. Sill, Okla.

—o—

Mr. and Mrs. William F. McLaughlin of Glen Ridge, N. J., announce the marriage of their daughter, Mary Jane, to Lt. Col. John Dixon Lawlor on 4 Dec., at Berlin, Germany.

The bride joined the WAC in 1943. She was secretary to General Eisenhower at the Allied Control Council, and last spring returned to the United States for a two

(*Please turn to Page* 390)

Posts and Stations

WEST POINT, N. Y.
14 Dec. 1946

The U. S. Army Transportation Corps is exhibiting a realistic and educational model presentation of the supply lines behind the Armies in France during the spring of 1945. The exhibit and demonstration is being held in the West Point Riding Hall, 13, 14 and 15 Dec.

The presentation is staged on a forty-eight by twenty-four foot model, representing western France from LeHavre to Luxembourg and from Paris to Brussels.

Roads and inland waterways are shown, and railroad lines are marked by miniature tracks over which move toy electric trains. The port of LeHavre is completely represented to include bombed-out buildings, scale model cranes, booms, cargo ships, DUKWS, derricks, and tractors.

The purpose of the exhibit and demonstration is to show vividly the problems of transportation in modern warfare and how these problems can best be solved with modern equipment. The exhibit brings out the main supply routes used to purvey the Third and Seventh Armies east of Verdun and the First and Ninth Armies east of Liege. Four transportation officers put on the demonstration, each dealing with one phase of the entire transportation problem. At the conclusion of the exhibition, this unit will return to Ft. Eustis, Va., for the purpose of using this presentation as a permanent training aid in the U. S. Army Transportation Corps School.

ANNAPOLIS, MD.
17 Dec. 1946

Capt. and Mrs. Ross Ainsworth Dierdorff gave a large Christmas party last Wednesday afternoon at their home on St. John's St. Among the out of town guests were Capt. and Mrs. Abraham Claude and Rear Adm. A. Finley France, jr., USN (Ret.), and Mrs. France of Washington, Mrs. David K. Claude of Orange, Va., widow of Colonel Claude, USMC, Maj. Gen. Pedro del Valle, USMC, and Mrs. del Valle, of "Troy Hill," Elkridge, Md., and Mr. and Mrs. Douglas Huntley Gordon of Baltimore.

Capt. and Mrs. Samuel K. Groseclose entertained at a holiday party last Friday at their home "Oak Point" near Annapolis. Presiding at the punch bowls and assisting were Mrs. W. E. Bradbury, mother of the hostess, Mrs. John T. Bowers, Mrs. Paul Dugan and Mrs. Leo May.

Those from Annapolis attending the luncheon given by Mrs. Thomas C. Cooley at the Army and Navy Club in Washington last Tuesday were, Mrs. Aubrey W. Fitch, Mrs. W. Taylor Smith, Mrs. St. Clair Smith, and Mrs. Harry Baldridge.

Capt. and Mrs. John R. Perry entertained at a cocktail party last week at North Severn Officers Club.

Comdr. and Mrs. Oliver W. Bagby, jr., and their children, Richard and Christine, arrived yesterday to spend the Christmas holidays with Commander Bagby's mother, Mrs. Oliver W. Bagby of Murray Ave.

Capt. and Mrs. C. L. Freeman and their daughter, Miss Phyllis Freeman of Fairlington, Va., were guests of Capt. and Mrs. Alfred P. Randolph for the week-end.

Comdr. and Mrs. John Urquhart and their two children who have been living on Hanover St., have moved to Chevy Chase, Md., where they will stay during Commander Urquhart's tour of duty in Washington.

MAXWELL FIELD, ALA.
14 Dec. 1946

Col. Watts S. Humphrey was host at a dinner party at the Officers' Club Sunday evening, 8 Dec., for a group of distinguished visitors. His guests were: Air Marshal R. V. Goddard, RAF, member of Joint Chiefs of Staff of Washington, D. C.; Mr. Allan Dulles of New York, former Deputy Chief of OSS, Mr. William Eddy, Special Assistant to Secretary of State for Intelligence; Mr. Benjamin Cain, former A-2 to General Kenney; Mr. Geo. McManus and Mr. Richard Crowe, both from Central Intelligence Group in Washington; Maj. Gen. Orvil A. Anderson, Group Captain A. N. Combe, and Maj. F. F. Bates.

On Monday, 9 Dec., representatives of the Brazilian Air Force paid a visit to Maxwell Field. Members of the party were: Brigadeiro Ajalmar Mascarembas, Lt. Col. Martinho Candier Dos Santos, Lt. Col. Jose Kahl Filho, Capt. Antonio Geraldo Peixoto and interpreters Col. Paul T. Hanley, Maj. Everett J. Burlando. The Air University entertained with a dinner party that evening at the Officers' Club with Maj. Gen. Muir S. Fairchild, Commanding General of the Air University, as host.

Col. and Mrs. Robert E. L. Choate entertained about 50 guests at a buffet supper at the Golf Club Tuesday evening.

The Ladies Golf Team held their regular luncheon at the Golf Club Tuesday noon, Mrs. A. J. Adams was in charge of arrangements.

Mrs. J. A. Gunn was hostess at a Dessert Bridge Party at the Officers' Club Wednesday. Her guest list numbered around forty.

Prize winners at the Wednesday evening Progressive by Pairs Bridge Party were 1st Lt. and Mrs. Jessie G. Williams; 2nd., Mrs. J. Newbank and Mrs. A. Shepherd; third Capt. and Mrs. H. W. Willard, and consolation, Lt. and Mrs. L. P. Deck.

1st CAV. DIV., TOKYO
3 Dec. 1946

The First Cavalry Division, Eighth Army, on 2 Dec., welcomed to its growing colony of families the dependents of nine more officers on duty in various units of the division in and around Tokyo. Approximately a score of families of officers and first three-grade noncoms have already arrived and are living with the units at their stations.

About 20 families are living on the community housing project of the Division Artillery, commanded by Brig. Gen. Ward Maris, and others are expected in the coming months.

Another of the community housing projects, situated near Camp Drake, is for the families of officers and non-commissioned officers on duty at the headquarters of the Division, where the 1st Squadron of the 5th Regiment is stationed. Here scores of homes have been completed, and the first occupants will move in this month. Many other abodes will be completed this winter at this site, which is located on a former golf course and commands an excellent view of Fujiyama.

The families of the following officers arrived yesterday aboard the Transport Ainsworth:

Chaplain (Maj.) Herman J. Kregel, Capt. Eugene O. McGee, Capt. Loren F. Parmley, Maj. Kenneth C. Paterson, jr., Capt. Ralph A. Peake, 1st Medical Squadron, Lt. Col. Francis L. Ready, Maj. Bertram C. Wright, and 1st Lt. Walter B. O'Neal.

The officers whose families have been brought over thus far have had many months of service overseas. The Division commander, Maj. Gen. William C. Chase, personally welcomed the families to Japan.

Priority for movement of dependents is based strictly on the highest number of months of overseas service. Every effort is being made to provide housing for those entitled by law to government quarters.

It is hoped that the rate of movement of families to join their loved ones overseas will be speeded as more housing becomes available in the Spring. The housing program for dependents has been impeded by the shortage of materials. All materials and equipment used are of Japanese origin.

FT. LEAVENWORTH, KANS.
14 Dec. 1946

Mrs. William S. Eley and Miss Georgia Day Eley, wife and daughter of Col. William S. Eley, former commandant of the United States Disciplinary Barracks at Fort Leavenworth, are spending a few days at the Post. Mrs. Eley and Miss Eley accompanied Col. Eley to the West Coast prior to his departure for Manila. After their visit here they will drive to West Point, where they will be at the Thayer Hotel.

Col. Horton V. White entertained the faculty of the School of Intelligence, Command and Staff College, for cocktails at the Golf Club on 6 Dec. Among those present were Lt. Gen. and Mrs. Leonard T. Gerow, Maj. Gen. and Mrs. William F. Dean, Col. and Mrs. W. Blanchard, Col. and Mrs. J. O. Curtis, Jr., Col. and Mrs. H. M. Forde, Col. and Mrs. J. H. Gilbreth, Col. and Mrs. M. J. Morin, Col. and Mrs. E. B. Nichols, Col. and Mrs. W. R. Peers, Col. and Mrs. M. O. Perry, Col. and Mrs. H. G. Sheen, Col. and Mrs. T. F. VanNatta, III, Col. and Mrs. Stuart Wood, Lt. Col. and Mrs. J. R. Bogue, Lt. Col. M. P. Bowden and guests, Lt. Col. and Mrs. F. C. Bridgewater; Lt. Col. and Mrs. H. W. Buchanan, Lt. Col. and Mrs. R. W. Camp, Lt. Col. and Mrs. A. M. Clark, Lt. Col. and Mrs. R. W. Corey, Lt. Col. and Mrs. H. W. Demmer, Lt. Col. and Mrs. P. W. Davidson, jr., Lt. Col. and Mrs. W. E. Eckles, Lt. Col. and Mrs. A. M. Eldridge, Lt. Col. and Mrs. R. G. Fergusson, Lt. Col. and Mrs. J. W. Ferris, Lt. Col. and Mrs. R. W. Glass, Lt. Col. and Mrs. M. L. Green, Lt. Col. and Mrs. M. J. Krisman, Lt. Col. and Mrs. R. W. Molloy, Lt. Col. and Mrs. R. J. Quinn, jr., Lt. Col. and Mrs. H. H. Rogers, Lt. Col. and Mrs. C. T. Schmidt, Lt. Col. and Mrs. J. L. Schutz, Lt. Col. and Mrs. Page E. Smith, Lt. Col. and Mrs. F. M. Sperry, and Lt. Col. and Mrs. E. C. Townsend.

The Fort Leavenworth Chapter of the Society of Army Daughters met for luncheon and their regular monthly business meeting at the Officers' Club on Wednesday, 4 Dec. Thirty-two members were present at the luncheon.

FT. BLISS, TEX.
16 Dec. 1946

Officers of the Antiaircraft and Guided Missiles Branch of The Artillery School honored Brig. Gen. and Mrs. Robert M. Montague at a reception and buffet dance last week at Fort Bliss.

General Montague is director of the Fort Bliss branch of the Artillery School.

In the palm-lined receiving line with General and Mrs. Montague were Maj. Gen. J. L. Homer, Commanding General of the Antiaircraft and Guided Missile Center, and Mrs. Homer. Maj. J. C. Maldanado, secretary of the school, introduced the guests.

The committee in charge of arrangements for the reception included Lt. Col. L. E. Cummings, Lt. Col. W. H. Morris and Major Maldanado.

Among the 500 guests were civilian friends from El Paso and many retired army officers residing in this area. Prominent among the retired personnel attending the reception were Maj. Gen. and Mrs. Charles H. Corlett and Maj. Gen. G. Ralph Meyers.

THE INFANTRY CENTER
Fort Benning, Ga.
14 Dec. 1946

General and Mrs. Omar N. Bradley were honored at a dinner party Tuesday given in the Palm Room of the Officers' Club by the commandant of the Infantry School, Maj. Gen. John W. O'Daniel. Guests included high ranking officers of the post and prominent Columbus citizens.

Guests present were Brig. Gen. and Mrs. William M. Miley, Brig. Gen. Whitfield P. Shepard, Brig. Gen. and Mrs. Benjamin F. Caffey, Jr., Brig. Gen. and Mrs. Reuben E. Jenkins, Col. Jesse A. Ladd, Col. and Mrs. John C. Blizzard, Col. and Mrs. Gilbert T. Collar, Col. and Mrs. Robert B. Hill, Col. and Mrs. Ernest F. Easterbrook, Lt. Col. and Mrs. O. O. Wilson, Maj. and Mrs. George S. Beatty, Jr., Brig. Gen. Walter S. Fulton, Mrs. Harriet S. Weeks, Mrs. Mary A. Dinsmore, Mrs. Dorothy T. Brann, Mr. and Mrs. Jefferson Box, Mr. and Mrs. Ralph King, Mr. and Mrs. L. W. McPherson, Mr. and Mrs. Ed Swift, Sr., Mr. and Mrs. Ben Hardaway, Mr. and Mrs. A. H. Chapman, and Mrs. Bryan Collier and Mrs. Frank Lumpkin, Sr.

Capt. Magnus L. Smith, formerly with the 503rd Parachute Infantry Regiment and 11th Airborne Division in the South Pacific, has been appointed commanding officer of the 501st Parachute Battalion, Infantry Centers' Airborne Section. Capt. Smith assumed command 3 Dec., replacing Maj. Irwin A. Edwards, who is now with the Academic Department of the Infantry School.

Lt. Col. and Mrs. Everett W. Duvall were hosts at a buffet supper Friday night in the Palm Room and Lounge of the Officers' Club.

Guests present were Col. and Mrs. Kermit Davis, Col. and Mrs. Robert L. Dulaney, Col. and Mrs. Charles Johnson, Col. and Mrs. Ben Harrell, Col. John Cassidy, Col. and Mrs. Wiley H. O'Mohundro, Lt. Col. and Mrs. Lloyd B. Ramsey, Lt. Col. and Mrs. John Paddock, Lt. Col. and Mrs. Earl M. Cooper, Lt. Col. and Mrs. Arden C. Brill, Lt. Col. and Mrs. Dick King, Lt. Col. and Mrs. Michael Paulick, Lt. Col. D. E. Hoffmeister, Lt. Col. Flynn, Col. and Mrs. Albert O. Connor, Maj. and Mrs. William T. Brogan, Maj. and Mrs. Joseph Flesch, Maj. and Mrs. James E. Milner, Mrs. Russell Harpole, Mrs. Frank C. Sinsel and Capt. and Mrs. A. Q. Smith.

HQ., AFWESPAC, MANILA
Philippine University Area
29 Nov. 1946

A reception was held at the Senior Officers' Mess Thanksgiving night in honor of the newly arrived dependents from the United States. Before the reception, Col. and Mrs. Charles M. Thirlkeld entertained at dinner at their quarters. Their guests were Maj. Gen. George F. Moore, new commanding general of AFWESPAC; Maj. Gen. and Mrs. J. G. Christiansen, Col. and Mrs. L. A. Denson, Col. and Mrs. Maynard H. Carter, Lt. Col. and Mrs. A. A. Cook, Lt. Col. and Mrs. Francis G. Hall, Lt. Col. Brown, Capt. Mann, Capt. Sygnor and Mrs. Comer.

Little Miss Carolyn Lott celebrated her seventh birthday 25 Nov. with a party at the quarters of her parents, Lt. Col. and Mrs. L. D. Lott. Present were her sisters Marylyn and Antoinette Lott, Johnny and Pat Stone, Punky Kenny, Mickey Helderman, Martha Gale and Frankie Hall and Judy and Nora Rega.

The officers and ladies of the G-3 Section, AFWESPAC, entertained at a dinner at the Turkey Hop of the Gregory Terrace Officers' Club in honor of Lt. Robert J. Owings and his fiancee, Miss Dulcie E. Surrey. Lt. Owings and Miss Surrey will be married in a ceremony Saturday, 30 Nov., at the PUA Chapel.

A reception will be given by the Manila Y. W. C. A. on 6 Dec. in honor of General Moore, General and Mrs. Christiansen and Col. and Mrs. Thirlkeld. There will be a program of folk dances and a lecture on the evolution of the Filipino dress with models showing the costumes.

The Red Cross is entertaining with a breakfast-bridge 6 Dec. in honor of the newly arrived dependents living in the P. U. Area at the Red Cross Club.

Many parties are being planned in this area 30 Nov. to enjoy the Army-Navy game. Perhaps the largest celebration will be at the Army-Navy Club in Manila where the festivities will start with dinner and dancing. A large score board has been erected on the lawn. The broadcast of the game will begin at 2 A. M., after which breakfast will be served. The Army and Navy Club was reopened a year ago on the occasion of last year's Army-Navy game and since great strides have been made in restoring the club to its prewar glory.

Every Tuesday is Ladies' Day at the Gregory Terrace Officers' Club. Luncheon, bridge, golf and swimming may be enjoyed by those who care to participate.

Chaplain (Capt.) William H. Myers has been assigned as Post Chaplain for PUA by Chaplain James C. Bean.

NORFOLK, VA.
19 December 1946

Capt. R. Harwood Fogel (MC) USN, and Mrs. Fogel were hosts Saturday night at a dinner party preceding the regular Saturday dinner dance at the Commissioned Officers mess in the Naval Shipyard. Guests included Capt. and Mrs. William W. Hargraves, Capt. and Mrs. John Bennett, Capt. and Mrs. George A. Alfen, Capt. and Mrs. Carl Broaddus, Dr. and Mrs. Charles Devine, Capt. and Mrs. Carl B. Bentel, Capt. and Mrs. John A. Gray, Capt. and Mrs. Freeman C. Harris, Capt. and Mrs. James L. Purcell, Comdr. Derrick A. Hoxle, Comdr. and Mrs. Matthew Hantover, Comdr. and Mrs. Ernest H. Joy, Comdr. and Mrs. Lytle, Lt. Comdr. Bertha G. Burns, Lt. Dorothea Gee, Lt. Comdr. and Mrs. Wilson G. Scanlon, Lt. Comdr. Saliue L. Vestal, Lt. and Mrs. Edwin G. Sweeney and Lt. and Mrs. Robert B. Raoch.

The Wardroom Officers of the USS Midway, and their wives entertained at a cocktail party Friday afternoon in the Officers Mess at the Naval Shipyard.

Miss Mary Genevieve Griffin of Portsmouth, whose marriage to Lt. (jg) John Hines Underwood, jr., USNR, will take place this month is being entertained at a number of pre-nuptial parties. Mrs. Charles W. Coleman and Mrs. Edward T. White were hostesses on Wednesday at a tea given for Miss Griffin at their home in Churchland: Miss Griffin was guest of honor on Saturday, at a luncheon at the Algonquin by Mrs. Gladstone Hill. Mrs. Luke Smith, jr. entertained Thursday at a dinner given in the Candle Light Tearoom in honor of the bride-to-be. Miss Jean Bell was hostess on Wednesday night at a miscellaneous shower for Miss Griffin.

Mr. and Mrs. Edward Louis Norvell have issued invitations for the marriage of their daughter, Miss Dorothy Jeanne Norvell, to Ens. Sydney Victor Carsten, Air Corps, USNR, on Saturday, 28 Dec. at 5 o'clock in the chapel in the Woods, Naval Air Station, and for the reception which will follow at the Officers Club.

HQ., ANTILLES DEPT., PUERTO RICO
7 Dec. 1946

Col. Henry J. Woodbury, Antilles Department District Engineer, and Mrs. Woodbury entertained 52 members of the Antilles Department and Tenth Naval District Staffs at the Wednesday evening dinner dance, 20 Nov., at the Naval Officers' Club, Isla Grande, San Juan.

Losey Field's powerful football team defeated Fort Brooke, 13-0, Thanksgiving Eve, in a game played under the lights at Munoz Rivera Park in San Juan.

A Thanksgiving Eve dinner was given at the El Morro Officers' Club, Fort Brooke, by Col. and Mrs. George W. Coolidge. Guests included 23 officers of the Antilles Department Staff and their wives. Colonel Coolidge is Antilles Department Deputy Chief of Staff.

A dinner dance was held at the Naval Officers' Club Wednesday evening, 4 Dec., for 29 members of the Antilles Department Staff and their wives, by Col. Frank M. Moose, Antilles Department Surgeon, and Mrs. Moose.

The Puerto Rico Olympic target shooting team, composed of five veteran military rifle experts of the Antilles Department and a civilian marksman, left 1 Dec. for Barranquilla, Colombia, to compete in the 1946 Central American Olympics.

The group is headed by Capt. John B. Bonini, coach and alternate firer, who participated in 1934 and 1938 as a member of the Puerto Rican squad. Ace marksman of the 1946 team is 1st Sgt. Jesus Acosta, of Fort Buchanan, who triumphed in all three championship rounds this year at Henry Barracks at Panama.

Other soldiers participating in the Olympics include two men each on the volley ball and track teams. M.Sgt. Gilberto Gonzalez, track team captain, participated in the eliminations as a civilian and reenlisted just prior to leaving for Barranquilla.

GREENVILLE AAB, S. C.
16 Dec. 1946

The regular meeting of the Women's Club of Headquarters Ninth Air Force at the Greenville Army Air Base was held 18 Dec., in the main lounge of the Officers' Club at the base.

Hostesses included Mrs. Robert Scudder, and Mrs. Lorraine Maersch. A luncheon program, followed by bridge and other games, was held.

Wives of all officer personnel arriving at GAAB are urged to join the organization and participate in the varied activities planned for 1947. Meetings are held twice monthly on the first and third Wednesday.

Col. Joseph H. Moore, assistant chief of staff, A-3 Headquarters section of the Ninth Air Force, has received orders for overseas duty in the European Theater of Operations.

Former Ninth Air Force chief of staff at Biggs Field, Texas, Colonel Moore was transferred to GAAB as the head of the A-3 in the merger of the Third and Ninth Air Forces.

Col. Thomas R. Ford, of the Ninth at GAAB, will replace Col. Moore as chief of the A-3, officials have announced.

Col. Moore is a veteran of the Pacific and European theaters.

A benefit for the AAF Aid Society was held

(*Please turn to Next Page*)

Posts and Stations

(*Continued from Preceding Page*)

last week at GAAB, at a dane at the Ninth Air Force Officers' Club. Booths were set up for contributions.

The benefit was staged by the Ninth Air Force Women's Club. Members sold tickets which were raffled off later for prizes valued at $25 to $40.

86TH DIV., MARIKINA, P. I.
2 Dec. 1946

Col. and Mrs. Maynard H. Carter entertained at dinner at the Blackhawk Club Saturday night, 30 Nov., remaining to enjoy the Army-Navy game broadcast.

Those present included Col. and Mrs. Thirlkeld, Col. Wilson, Lt. Col. and Mrs. Rogers, Lt. Col. and Mrs. Kirby, Lt. Col. and Mrs. Hall.

There will be a reception at the Blackhawk Club (the Officers' Club of the 86th Division) in honor of the newly arrived dependents arriving from the States to join the 86th on Wednesday evening, 4 Dec.

Society

(*Continued from Page* 388)

Comdr. and Mrs. Philip H. Ryan of Tall Pines.

Invited guests present were Mr. and Mrs. H. S. Ullman of River Forest, Ill., and Mrs. George B. Magoun of Baltimore.

Mrs. Howard Clark II, widow of Col. Howard Clark, is during the holidays visiting her son, Lt. Col. and Mrs. Howard W. Clark of Arlington, Va. Mrs. Clark's permanent residence is 108 East Hyde Park Ave., Sarasota, Fla.

Mrs. George D. Vanture, widow of Col. George D. Vanture, is now living at 115 East Clematis St., Sarasota, Fla.

Brig. Gen. Troup Miller, U. S. Army, Retired, and Mrs. Miller of Atlanta, Ga., will spend the Christmas holidays with their daughter and son-in-law, Col. and Mrs. Frederic W. Barnes at 1931 Seminary Road, Alexandria, Va.

After two months in California, Maj. Gen. Stephen G. Henry, USA-Ret., and Mrs. Henry have returned to Virginia to welcome their son, Lt. S. G. Stephens, jr., (USMA '46) for Christmas, who will arrive tomorrow from Ft. Benning, Ga., with several of his classmates.

Word comes of the birth of a daughter to Col. and Mrs. L. R. Drake, at Terrehaute, Ind., 5 Dec., the baby being the granddaughter of Col. F. Drake, USA-Ret., and Mrs. Drake of San Francisco, Calif., also the niece of Lt. and Mrs. R. E. Drake of the University of Michigan, and of Mrs. F. N. Drake of Little Rock, Ark., wife of the late Maj. F. N. Drake.

After 50 years of uninterrupted service, Maj. Herman Neville Archer has been retired and lives with his family in Winter Park, Fla., where he has bought a home. His address is 408 E. New England Ave.

Rear Adm. Alex M. Charlton, USN-Ret., has purchased a house at 1030 South 32nd St., Omaha, Nebr., where he and Mrs. Charlton will reside.

Misses Inez and Carolyn Wieczorek entertained the Baltimore Chapter of the Society of the Daughters of the U. S. Army with a tea 7 Dec. at their home in Catonsville, Md.

Weddings and Engagements

(*Continued from Page* 388)

months' vacation. She went to Berlin in May as a civilian administrative assistant to General William H. Draper, Chief of the United States Economic Division.

Colonel Lawlor is a son of Mrs. Helen Lawlor of Allston, Mass., and the late Michael J. Lawlor. He attended Harvard University and graduated from West Point in 1934. He is Chief of the United States Element of the Allied Liaison and Protocol section.

The couple will reside in Vienna, Austria where Colonel Lawlor has recently taken up a new assignment.

The betrothal of Rosemarie Fall Kurfurst to Ens. James Jarleth Kelly, jr., USN, son of Mrs. James J. Kelly of Hollywood, Calif., and the late Major Kelly is announced by her parents, Mr. and Mrs. John Charles Kurfurst of Jamul, Calif. Miss Kurfurst is the neice of Col. Archibald Fall, ret., and Mrs. Fall of La Jolla, Calif., and is well known in Army circles having visited them on many Stations. The bride-to-be is a student at San Diego State College. Ensign Kelly studied at Los Angeles City College prior to entering the Navy in 1942. An early spring wedding is planned.

Army Orders

(*Continued from Page* 387)

1st Lt. Robert R. Gray, OD.
1st Lt. Joseph A. Guimond, CMP.
Maj. William E. Harbill, AUS.
1st Lt. Ralph E. Hastings, AUS.
1st Lt. Frederick M. Held, OD.
Capt. Neal C. Holmes, AUS.
2d Lt. Hervey E. Keator, CMP.
Capt. Joseph J. Klonowski, AUS.
Capt. James T. Layton, AUS.
1st Lt. James M. Love, OD.
1st Lt. Ben C. McComas, OD.
Maj. Samuel E. Mear, AUS.
1st Lt. Delwin A. Mills, AUS.
1st Lt. Sam A. Moore, AUS.
Capt. John U. Nagle, AUS.
Capt. James G. O'Neal, AUS.
Maj. John E. Parr, AUS.
Lt. Col. Earl D. Payne, OD.
Capt. Bartholomew W. Peterson, AUS.
Capt. Guy H. Quick, OD.
1st Lt. Jess W. Ray, AUS.
1st Lt. Ed P. Redus, OD.
Capt. Harry Rothauser, AUS.
Capt. George E. Rumsey, OD.
Capt. William F. Ryles, AUS.
2d Lt. Stuart D. Sanders, AUS.
1st Lt. Roy C. Sheppard, OD.
Maj. Cliff Smith, AUS.
Capt. Willis O. Tate, AUS.
Maj. William B. Vaughan, OD.
2d Lt. Allen J. White, FD.
1st Lt. Andrew B. White, QMC.
Capt. Luke J. Wilburn, AUS.
Capt. Stephen Yancy, AUS,
Capt. Albert Alexander, AGD.
Maj. Warren E. Allen, AGD.
Capt. George R. Arbuckle, AGD.
1st Lt. Harold M. Brinker, AC.
1st Lt. Woodrow W. Bruce, CE.
Lt. Col. Carl J. Ellis, AGD
Maj. Charles P. Finegan, AGD.
Capt. Sam C. Hutchinson, CMP.
Lt. Col. John H. Hyland, AGD.
Capt. Ferdinand Johnson, AGD.
Maj. Elbert T. Jones, AGD.
Capt. William D. Kahrs, AGD.
Lt. Col. David Kirk, AGD.
1st Lt. Walter J. Kubala, AGD.
1st Lt. Theodore S. Long, AGD.
Capt. Peter F. McDermott, AGD.
Capt. George P. Mahon, AGD.
Capt. Millard L. Mather, AGD.
Capt. Leonard D. Meyer, AGD.
1st Lt. Edward J. Murphy, AGD.
Capt. Paul Orsini, AGD.
Maj. William S. Perry, AGD.
Capt. Rex B. Rasmus, AGD.
Capt. Daniel J. Renneisen, AGD.
1st Lt. Ralph A. Schilling, AGD.
Lt. Col. Aloysius Seipel, AGD.
Maj. Glenn M. Street, AGD.
Maj. Herschell B. Truex, AGD.
1st Lt. Roy W. Wigton, AGD.
Capt. Carl W. Bailey, FD.
1st Lt. Harry G. Berkshire, FD.
2d Lt. Lewis C. Culmann, FD.
Capt. William M. Davis, FD.
1st Lt. William H. Griffin, FD.
1st Lt. Charles E. Jones, FD.
Capt. Joseph F. Keebler, FD.
Capt. Donald W. McRell, FD.
1st Lt. Edward W. Quinlan, jr., FD.
Capt. George F. Slater, FD.
1st Lt. Leo T. Stiles, FD.
Maj. Meade L. Waugh, FD.
Capt. C. D. Campbell, CAC.

To AFPAC, Tokyo, Japan

Maj. George W. Adair, SC.
Capt. Harold E. Allen, SC.
Capt. Arthur A. Bennett, SC.
Capt. Scott Cooper, FD.
1st Lt. James W. Dunn, SC.
Capt. Gerard D. Furlong, SC.
1st Lt. Fred C. Gotham, SC.
1st Lt. Walter J. Gregorski, SC.
1st Lt. John J. Grotts, SC.
Capt. Frank R. Hallin, SC.
Maj. Michael J. Lynch, FD.
Capt. Otte J. Mueller, SC.
1st Lt. Patrick J. O'Connor, SC.
Capt. Otis Pace, SC.
Maj. Thomas Paolozzi, SC.
Maj. Millard S. Parrish, SC.
1st Lt. John M. Raeburn, SC.
1st Lt. Joseph F. Rankin, SC.
Capt. Darrell L. Reed, FD.
2d Lt. George W. Reeder, SC.
1st Lt. Chris J. H. Schafer, jr., SC.
1st Lt. Benjamin Schlesinger, SC.
Capt. Waldo V. Thrasher, SC.
Capt. Elvin G. Williamson, SC.
Capt. Christopher Wollenberg, SC.
CWO Benjamin V. Ball.
CWO Robert J. Beton, USA.
CWO Edgar A. DeWalt, USA.
WOJG Lewis B. Dell, USA.
WOJG Joseph W. Keleher, USA.
WOJG Reed L. McClellan, USA.
CWO Joseph E. McMahon, USA.
CWO Samuel S. Smythe, USA.
CWO Leslie E. Wood, USA.
CWO Emmett R. Wright, USA.
2d Lt. Sadao Takahashi, AUS.
Capt. Arthur J. Jackson, FA.
Capt. Mark K. Hanson, Inf.
Lt. Col. Ray Benedict, CMP.
Capt. William H. Florence, CMP.
Capt. Peter J. Smith, CMP.

To AFWESPAC, Manila

Capt. Robert Bourlier, jr., Inf.
Capt. William S. Pye, Inf.
Col. William N. White, (FA). GSC.
Capt. Joseph A. Hester, jr., Cml C.
CWO Arnold B. Elkins, USA.
CWO Ernest A. Jacques, USA.
CWO Walter M. Osczakiewicz, USA.
Lt. Col. Ralph Ackerman.
1st Lt. Berwin Adler.
1st Lt. Otto R. Bowman
Capt. Hugh G. Cherry.
Capt. George W. Dover.
Capt. William E. Elliott.
Maj. Ira K. Ewalt.
Capt. Robert G. Farrell.
Capt. Ferdinand F. Federlin.
Capt. Edward F. Flaherty.
1st Lt. Mark S. Garner.
1st Lt. Harold W. Gerard.
Capt. Aaron Gomberg.
Maj. Jewell J. Haynie.
Maj. John S. Honey.
Maj. Edward D. Howell.
1st Lt. James B. Jensen.
1st Lt. Alvin C. Jones, jr.
Maj. Jesse W. Kelley.
Maj. Victor E. Luhorn.
Maj. John B. McKenzie.
Capt. Ronald A. McLain.
2d Lt. Hector A. Meunier.
2d Lt. James F. Murray.
1st Lt. Theodore J. Newman.
Lt. Col. Arthur H. Nordstrom.
1st Lt. Francis A. Palau.
1st Lt. Ralph R. Sawtell.
Capt. Joseph P. Schechter.
2d Lt. Charles H. Simons.
1st Lt. Henry K. Thatcher.
2d Lt. George J. Trump.
1st Lt. George W. Wallace.
1st Lt. Richard E. Adams, QMC.
1st Lt. Charles R. Bates, QMC.
1st Lt. Norman J. Bauman, QMC.
Capt. Wilbur D. Bingham, QMC.
2d Lt. Tracy R. Blackburn, QMC.
Maj. Edward C. Brady, QMC.
2d Lt. John D. Brady, QMC.
2d Lt. Samuel B. Bristow, QMC.
Maj. Edward J. Brucher, QMC.
Capt. Richard J. Buiger, QMC.
Maj. Lee V. Casey, QMC.
2d Lt. Joseph J. Catania II, QMC.
1st Lt. William C. Clark, QMC.
1st Lt. Albert Cohen, QMC.
Capt. Kenneth J. Connelly, QMC.
Lt. Col. Charles C. Cornelius, QMC.
Capt. Harold J. Cornwell, QMC.
1st Lt. Harry R. Cunningham, QMC.
1st Lt. Henry J. Engel, QMC.
Maj. Lloyd M. Fellbaum, QMC.
1st Lt. Robert A. Folkes, QMC.
2d Lt. Golden J. Frame, QMC.
Capt. Theodore H. Gaylor, QMC.
1st Lt. Dominick A. Grey, QMC.
2d Lt. Mitsuo Hagio, QMC.
Capt. Lawrence W. Hale, QMC.
Capt. Royal A. Harrison, QMC.
Capt. James L. Henson, jr., QMC.
Capt. Benny C. Janes, QMC.
1st Lt. Thomas E. Lamb, QMC.
Maj. William H. Land, QMC.
1st Lt. Domenic Leone, QMC.
1st Lt. Ralph A. Libby, QMC.
1st Lt. Eugene L. Liberati, QMC.
Capt. Julius C. Lienhard, QMC.
Capt. Jesse W. Link, QMC.
Capt. Joseph J. Lyden, QMC.
1st Lt. Franklin S. McCain, QMC.
Maj. Fred W. McIlroy, QMC.
Capt. Harry D. Meicher, QMC.
Capt. Virgil J. Miller, QMC.
1st Lt. Albert Mongold, QMC.
1st Lt. Jesse T. Moores, QMC.
Maj. Frank J. Morgan, QMC.
1st Lt. William F. Murphy, jr., QMC.
Lt. Col. Paul H. Myers, QMC.
1st Lt. Gordon T. O'Neill, QMC.
Lt. Col. John R. Porterfield, QMC.
Capt. Lowell H. Powers, TC.
Lt. Col. Chris C. Reger, QMC.
Capt. Arthur W. Reuben, QMC.
1st Lt. Dow A. Rogers, jr., QMC.
Capt. George J. Schrader, QMC.
Capt. Edward J. Seeski, QMC.
1st Lt. Preston O. Sewell, QMC.
Capt. Orval L. Shores, QMC.
Capt. Harry Snow, QMC.
Capt. Louis O. Sunker, QMC.
Capt. Ramon Thomas, QMC.
Capt. Wallace A. Wayne, QMC.
CWO No. 1 Benjamin A. Heriot, USA.
CWO No. 1 Earl N. Shephard, USA.
Capt. Fred L. Brysan, FD.
Capt. Lloyd R. Graves, FD.
Lt. Col. George R. Jones. FD.
Capt. Robert F. Klase, FD.
Maj. Russell A. Lockwood, FD.
Capt. Elmer E. Peper, FD.
Maj. Paul L. Williams. FD.
Lt. Col. Walter E. Dobbins, jr., Sig C.
Maj. George J. Ford, Sig C.

To USAF Pacific, Okinawa

Capt. James L. Aldridge, CMP.

To AFPAC, Korea

1st Lt. James D. Clavid, OD.
1st Lt. Ralph H. Dengler, OD.
Lt. Col. Homer Hamilton, OD.
Maj. Robert C. Hughes, OD.
2d Lt. Thurston R. Perry, OD.
Capt. Benjamin W. Pope, OD.
1st Lt. Grant L. Ray, OD.
Maj. Harry W. Smith, OD.
Capt. Harold Townsend, OD.
1st Lt. Blake F. White, OD.
1st Lt. James B. Wright, OD.
1st Lt. John G. Cleveland, CE.
2d Lt. Orville L. Erfert, CMP.
Capt. Walter J. Mazike, CMP.
Capt. Fladge Robbins, CMP.
Capt. Robert E. L. Sisco, CMP.
1st Lt. Robert E. Bozorth, Inf.
1st Lt. Harold T. Calligan, Inf.
Capt. William R. Cruce, Inf.
2d Lt. Curry C. Dixon, Inf.
Col. Kenneth F. Hanst, Inf.
Capt. John W. Hower, Inf.
2d Lt. William B. Johns, Inf.
Col. Charles W. Jones, Inf.
1st Lt. Conrad F. Moreno, Inf.
2d Lt. Philip Stoak, Inf.
1st Lt. Russell W. Sweeney, Inf.
2d Lt. Fred P. Talmadge, Inf.
Lt. Col. Hubert D. Thomte, Inf.
Capt. John B. Wine, Inf.
Maj. Stephen J. Carr, QMC.
Capt. Edward J. Giguere, QMC.
Capt. Lawrence E. Humphries, QMC.
Capt. Kenderton S. Lynch, QMC.
2d Lt. William E. Russell II, QMC.
Col. Harry L. Vitzthum, Sig C.
Maj. David L. Turnbull, OD.
2d Lt. Harley W. Haines, CE.
1st Lt. Chester A. Reynolds, jr., TC.
Capt. Leland M. Hebblethwaite, CE.
Capt. Harold M. Parker, CE.
2d Lt. David E. Castles, jr., QMC.
1st Lt. Edward A. Anderson, jr., QMC.
1st Lt. Clarence L. Bailey, QMC.
1st Lt. Boyden Bearce, QMC.
Capt. Harold C. Beckwith, QMC.
1st Lt. William F. Belsky, QMC.
2d Lt. John C. Boyd, QMC.
1st Lt. Robert F. Burns, QMC.
1st Lt. Jess H. Carnal, QMC.
Maj. Earl D. Christenson, QMC.
Maj. Thomas B. Christie, QMC.
Capt. Harry L. Comer, QMC.
Lt. Col. John D. Copeland, jr., QMC.
2d Lt. David M. Crausby, QMC.
1st Lt. Floyd W. Crouch, jr., QMC.
Lt. Col. Harold S. Dean, QMC.
Lt. Col. Alcide Desrochers, QMC.
Capt. Nicholas J. Di Marino, QMC.
2nd Lt. William A. Fibush, QMC.
Capt. Boleslaw S. Filipek, QMC.
Maj. Walter S. Filler, QMC.
Maj. Harold C. Gibson, QMC.
1st Lt. James W. Graham, QMC.
Capt. Ira L. Harper, QMC.
Capt. James W. Hill, QMC.
Capt. Martin L. Lathers, QMC.
1st Lt. George E. Leiser, QMC.
2d Lt. Roger J. Lilly, QMC.
Capt. Thomas S. Lloyd, QMC.
2d Lt. Alton L. Luick, QMC.
1st Lt. Elgie C. Luse, QMC.
1st Lt. Walter J. McConaghy, QMC.
Maj. Jerome Mandel, QMC.
Capt. William B. Mote, QMC.
Maj. Wilbur J. Myers, QMC.
Capt. Herbert E. Nelson, QMC.
1st Lt. Edward J. O'Brien, QMC.
Capt. Beverly R. Palmer, QMC.
2d Lt. John J. Purtell, QMC.
1st Lt. Alfred C. Retterer, QMC.
1st Lt. Herbert W. K. Schreiner, QMC.
Capt. Leonard F. Sims, QMC.
Capt. Thomas A. Smith, QMC.
Maj. Watson A. Stains, jr., QMC.
Col. Lloyd R. Wolfe, QMC.
Ch. (Capt.) Robert G. Alexander, USA.
Capt. Ruhi L. Arbogast, CE.
1st Lt. Robert W. Bertagnoli, SC.
Maj. Carl A. Bigler, AGD.
Capt. Charles M. Conklin, Sig C.
1st Lt. Emanuel M. Cooper, AGD.
1st Lt. Frank L. Coyle, CE.
Maj. Kenneth DuMond, Sig C.
1st Lt. Phillip Esformes, Sig C.
Maj. Roscoe J. Gochnour, AGD.
Capt. Aaron M. Gore, Sig C.
Maj. Thomas B. Hammond, AGD.
1st Lt. Harold I. Harper, CE.
2d Lt. Delbert L. Heaton, Sig C.
1st Lt. Lazaro M. Hernandez, FD.
1st Lt. Charles K. Hewitt, Sig C.
Capt. Phillip S. Huston, Sig C.
Ch. (Capt.) Joseph S. Johnson, USA.
Capt. Edward C. Kelton, Sig C.
Capt. Martin E. Lewis, CE.
2d Lt. Robert L. McCracken, CE.
1st Lt. Louis F. Marmon, Sig C.
Capt. Cyril R. Murphy, AGD.
1st Lt. Joseph S. Patane, FD.
Capt. Robert L. Pike, Sig C.
1st Lt. Robert L. Porter, Sig C.
Capt. Edward A. Raymond, Sig C.
Lt. Col. Earl Rhodes, AGD.
1st Lt. Herbert E. Schneider, DC.
Capt. Joseph A. Schuster, AGD.
Maj. Dewey F. Seipt, AGD.
1st Lt. Marshall J. Smith, Sig C.
1st Lt. Robert W. Smith, Sig C.
1st Lt. Philip Spigner, DC.
Lt. Col. Wilbur A. Sweeten, AGD.
Capt. David A. Walters, Sig C.
1st Lt. Gail E. Warner, AGD.
WOJG Jerry Cerny, USA.
WOJG Roland A. Moore, USA.
2d Lt. William L. Davis, CAC.
Maj. Matthew A. Hutmaker, CAC.

(*Please turn to Page* 392)

A
Bol
Mrs

A
Ft.
Alm
son
S. V
Cha
Mrs
late

B
Hos
Cap

B
Hos
1st

B
Boll
Mrs.

C
pita
Mrs.
Jo

C
pita
Capt
a so

C
Hos
Maj.
Susa

D
Ham
Col.
Jean

D
Ft. M
Mrs.

G
Oak
Mrs.
Tow

H
ing F
Warr

H
rado
Mrs.

J
Bolli
Mrs.

K
Bolli
Mrs.

K
pital,
Laura
fr.an,
Mrs.
N. J.,
N. Y.

L
Hosp
Lt. C

M
Hosp
1st L
Tedd

M
ler F
Mrs.
Edwa

McN
pital,
and M
ela Li

PA
Ft. Ge
Lt. an
ond ch

PO
Hospit
Capt. a

RHO
Hospit
1st Lt.

RIC
pital, V
and M

RUS
Bolling
Mrs. A

SKI
Bolling
Mrs. F

STE
Hospit
1st Lt.

VOS
Bolling
and Mr

WAL
Ft. Geo
Col. an
a daug

WHI
pital, B
and Mr

WIL
Bolling
Mrs. Le

WILS
Hospita
Capt. a

ADAM
Bolling
Mrs. Ja

ALMO
Ft. Bra
Almquis
son, Pet
S. Whit
Charles
Mrs. E.
late Maj

BARI
Hospita
Capt. a

BROI
Hospita
1st Lt. a

BURC
Bolling
Mrs. Th

CHAS
pital, F
Mrs. Ed
Jo Ann

CHEY
pital, F
Capt. A
a son, A

COLC
Hospita
Maj. an
Susan I

DAUC
Hamilto
Col. an
Jean H

DRAC
Ft. Mon
Mrs. Ru

GATE
Oak Ri
Mrs. Ma
Townle

HALT
ing Fld
Warren

HINE
rado Sp
Mrs. Ha

JOHN
Bolling
Mrs. Ha

KROI
Bolling
Mrs. Jo

KUPI
pital, F
Laurana
fr.an, a
Mrs. C
N. J., a
N. Y.

LAYI
Hospita
Lt. Col.

MART
Hospita
1st Lt.
Tedd I

MAR
ler Fie
Mrs. C
Edward

McNI
pital, F
and Mr
ela Lill

PADC
Ft. Geo
Lt. and
ond chi

POW
Hospita
Capt. a

RHO
Hospita
1st Lt.

RICH
pital, W
and Mr

RUSS
Bolling
Mrs. A

SKIP
Bolling
Mrs. F

STEI
Hospita
1st Lt.

VOSI
Bolling
and Mr

WAL
Ft. Geo
Col. an
a daug

WHI
pital, F
and Mr

WIL
Bolling
Mrs. L

WIL
Hospita
Capt. a

Births • Marriages • Deaths

(No charge for Service announcements. Please notify promptly.)

Born

ADAMS — Born at the station hospital, Bolling Fld., D. C., 30 Nov. 1946, to S. Sgt. and Mrs. James A. Adams, AC, a daughter.

ALMQUIST—Born at the Station Hospital Ft. Bragg, N. C., 5 Dec. 1946, to Lt. Peter W. Almquist (USMA '44) and Mrs. Almquist, a son, Peter Whitmore; grandson of Col. Charles S. Whitmore, USA-Ret., (USMA '20) and Mrs. Charles S. Whitmore, Pinehurst, N. C., and of Mrs. E. H. Almquist, Columbia, Mo. and the late Maj. E. H. Almquist (USMA '17).

BARLOW — Born at Walter Reed General Hospital, Washington, D. C., 12 Dec. 1946, to Capt. and Mrs. Dudley H. Barlow, a daughter.

BROILES — Born at Walter Reed General Hospital, Washington, D. C., 12 Dec. 1946, to 1st Lt. and Mrs. James O. Broiles, a daughter.

BURCH — Born at the station hospital, Bolling Fld., D. C., 3 Dec. 1946, to M. Sgt. and Mrs. Thomas E. Burch, AC, a daughter.

CHASE — Born at Fresno Community Hospital, Fresno, Calif., 24 Oct. 1946, to Capt. and Mrs. Edward D. Chase, DC, USA, a daughter, Jo Ann.

CHEYNE — Born at Brooke General Hospital, Ft. Sam Houston, Tex., 19 Nov. 1946, to Capt. Arthur Cheyne, CMP, and Mrs. Cheyne, a son, Arthur Clark, Jr.

COLQUITT — Born at the 368th General Hospital, Ft. Gulick, C. Z., 10 Dec. 1946, to Maj. and Mrs. Rollins Colquitt, a daughter, Susan Darden.

DAUGHERTY—Born at Base Hospital, Hamilton Field, Calif., 15 Dec. 1946, to Lt. Col. and Mrs. Jean H. Daugherty, a son, Jean Hamilton, II.

DRAGOO — Born at the station hospital, Ft. Monmouth, N. J., 1 Dec. 1946, to Capt. and Mrs. Russell N. Dragoo, a son, Lynn Francis.

GATES — Born at the Oak Ridge Hospital, Oak Ridge, Tenn., 12 Dec. 1946, to Maj. and Mrs. Mahlon E. Gates, CE, a daughter, Pamela Townley.

HALT — Born at the station hospital, Bolling Fld., D. C., 2 Dec. 1946, to T. Sgt. and Mrs. Warren F. Halt, AC, a daughter.

HINES — Born at Glockner Hospital, Colorado Springs, Colo., 30 Nov. 1946, to Capt. and Mrs. Harry L. Hines, a son, Heath Lester.

JOHNSON — Born at the station hospital, Bolling Fld., D. C., 4 Dec. 1946, to Capt. and Mrs. Harry N. Johnson, AC, a daughter.

KROMKA — Born at the station hospital, Bolling Fld., D. C., 6 Dec. 1946, to WO and Mrs. John A. Kromka, AC, a son.

KUPFRIAN — Born at Tilton General Hospital, Ft. Dix, N. J., 14 Dec. 1946, to 1st Lt. Laurance B. Kupfrian and Mrs. Isabelle Kupfrian, a son; grandson of Asst. Postmaster and Mrs. Conrad Kupfrian, Hasbroock Heights, N. J., and of Mrs. Constance Coletti, Olean, N. Y.

LAYHEE — Born at Walter Reed General Hospital, Washington, D. C., 11 Dec. 1946, to Lt. Col. and Mrs. Harold Layhee, a son.

MARTIN — Born at Walter Reed General Hospital, Washington, D. C., 24 Nov. 1946, to 1st Lt. and Mrs. Theodore P. Martin, a son, Tedd Phillip.

MARTIN—Born at Station Hospital, Keesler Field, Miss., 14 Dec. 1946, to Maj. and Mrs. Cecil F. Martin, AC, a son, Douglas Edward.

McNEILL — Born at the 368th Station Hospital, Ft. Gulick, C. Z., 6 Dec. 1946, to Capt. and Mrs. Jesse L. McNeill, a daughter, Pamela Lillian.

PADGHAM — Born at Regional Hospital, Ft. George G. Meade, Md., 26 Nov. 1946, to 1st Lt. and Mrs. Russell L. Padgham, their second child, a son, Roddy Maskrey.

POWELL—Born at Walter Reed General Hospital, Washington, D. C., 9 Dec. 1946, to Capt. and Mrs. David R. Powell, a son.

RHODES — Born at Walter Reed General Hospital, Washington, D. C., 10 Dec. 1946, to 1st Lt. and Mrs. Robert Rhodes, a son.

RICE — Born at Walter Reed General Hospital, Washington, D. C., 11 Dec. 1946, to Maj. and Mrs. Charles S. Rice, a daughter.

RUSSELL — Born at the station hospital, Bolling Field, D. C., 9 Dec. 1946, to Col. and Mrs. Austin J. Russell, AC, a son.

SKIPP — Born at the station hospital, Bolling Fld., D. C., 7 Dec. 1946, to Maj. and Mrs. Francis E. Skipp, jr., AC, a son.

STEINER — Born at Walter Reed General Hospital, Washington, D. C., 12 Dec. 1946, to 1st Lt. and Mrs. William J. Steiner, a son.

VOSBURGH — Born at the station hospital Bolling Fld., D. C., 29 Nov. 1946, to 1st Lt. and Mrs. Donald C. Vosburgh, AC, a son.

WALKER — Born at the station hospital, Ft. George G. Meade, Md., 6 Dec. 1946, to Lt. Col. and Mrs. Lawrence H. Walker, jr., GSC, a daughter, Barbara Dianne.

WHITTINGTON — Born at the station hospital, Bolling Field, D. C., 9 Dec. 1946, to Capt. and Mrs. Marvin E. Whittington, AC, a son.

WILLIAMS — Born at the station hospital, Bolling Fld., D. C., 6 Dec. 1946, to Maj. and Mrs. Lee R. Williams, AC, a son.

WILSON — Born at Walter Reed General Hospital, Washington, D. C., 7 Dec. 1946, to Capt. and Mrs. Carl Wilson, a daughter.

WRIGHT — Born at Walter Reed General Hospital, Washington, D. C., 16 Dec. 1946, to Maj. and Mrs. John M. Wright, jr., GSC, USA, a son, Richard Kenneth.

Married

CRAWFORD-PATTON — Married in Glen Ridge Congregational Church, Glen Ridge, N. J., 14 Dec. 1946, Miss Jean Patton, to Lt. (jg) Henry Paine Crawford, USCG, (USCGA '44).

EDWARDS-ARROWOOD — Married in the chapel at Ft. Shafter, Honolulu, T. H., 14 Nov. 1946, Miss Kathleen Arrowood, to Comdr. Karl Gunnar Edwards.

EITT-WHITE — Married in the home of the bride's parents, The Damsite, Smithtown, L. I., N. Y., 11 Dec. 1946, Miss Carmel White, to Lt. Col. Herbert E. Eitt, USA.

FENTON-KARP — Married in New York City, 17 Dec. 1946, Miss Marilyn J. Karp, to Lt. (jg) Arnold Neale Fenton (MC) USNR.

FOSTER-WEBB — Married in St. Paul's Protestant Episcopal Church, Vienna, Md., 30 Nov. 1946, Miss Marian Webb, to Lt. Jack Edward Foster, USAAF.

FOWLER-HARRIGAN — Married in the rectory of the Star of the Sea Church, Long Branch, N. J., 18 Dec. 1946, Miss Agnes Marie Harrigan, to Ens. George Oliver Fowler, jr., USN.

GOODRICH-ADAMSON — Married in San Antonio, Tex., 14 Dec. 1946, Miss June Adamson, to Lt. E. Raymond Goodrich, Jr., MC.

HANNAH-HAYMAN—Married in the chapel at the U. S. Naval Academy, Annapolis, Md., 14 Dec. 1946, Miss Barbara Hayman, to Ens. Glyde Brewer Hannah, (USNA '46).

HARRIS-CARWILE — Married at the Bible Presbyterian Church, Greenville, S. C., 29 Nov. 1946, Miss Julya Temple Carwile, to Capt. Walter R. Harris.

HAYES-ADAMS — Married in the First Lutheran Church, Norfolk, Va., 30 Nov. 1946, Mrs. Dorothy Wilkinson Adams, to Capt. Harold Everett Hayes.

IRVINE-SALTZMAN — Married in New York City, 16 Dec. 1946, Capt. Ruth Ann Saltzman, WAC, to Col. Clarence Shortridge Irvine, AAF., Commander of the B-29 "Dreamboat."

KELLOGG-FLYNN — Married at St. Joseph's Cathedral, Hartford, Conn., 30 Nov. 1946, Jean Elizabeth Flynn, to Paul Vincent Kellogg, jr., son of Col. and Mrs. Paul Vincent Kellogg, of Petersburg, Va.

LAWLOR-McLAUGHLIN — Married at Berlin, Germany, 4 Dec. 1946, Mary Jane McLaughlin, to Lt. Col. John Dixon Lawlor (USMA '34).

LOOMIS-McLEAN — Married in St. Paul's Episcopal Church, Alexandria, Va., 14 Dec. 1946, Miss Ann Carter McLean, daughter of Col. James Douglas McLean, USMC, and Mrs. McLean, to Lt. Gilbert Brainard Loomis, jr., USMCR.

MARTIN-BARRETT — Married in the Presbyterian, Church, Norfolk, Va., 14 Dec. 1946, Miss Dorothy Leftwich Barrett, daughter of Maj. and Mrs. John Harwood Barrett, of Arlington, Va., to Cloyd Martin.

MELENDY-THACHER — Married in the Protestant Church, Hoechst, Germany, 14 Dec. 1946, Miss Josephine Longworth Anderson Thacher, to Maj. Robert Gordon Melendy, AUS.

OWINGS-SURREY — Married in the AFWESPAC chapel, Manila, P. I., 30 Nov. 1946, Miss Dulcie Surrey, to Lt. Robert Owings of Steubenville, Ohio.

PARKER-OSMUN — Married in the Chevy Chase Presbyterian Church, Washington, D. C., 7 Dec. 1946, Miss Helen Edith Osmun, daughter of Col. and Mrs. R. A. Osmun, USA-Ret., to Mr. Pierre Edward Parker.

RADFORD-ELKINS—Married in the chapel of St. Cornelius the Centurion, Governors Island, N. Y., 15 Dec. 1946, Miss Mae Wynn Elkins, daughter of Col. and Mrs. Stephen B. Elkins, to Maj. Lawrence C. Radford, D. C.

SANDICK-EISLER — Married in New York City, 11 Dec. 1946, Miss Pearl Claire Eisler, to Lt. Herbert Sandick, MC, AUS.

SCIFRES-JENNYS — Married in the Presbyterian Church, Rye, N. Y., 14 Dec. 1946, Miss Shirley Spotswood Jennys, to Lt. Charles Franklin Scifres.

TAITANO-JOHNSTON — Married in the post chapel, Ft. George G. Meade, Md., 14 Dec. 1946, Miss Marian Johnston, to Lt. Carlos P. Taitano, AUS.

VAN NESS-SCIALOM — Married at Christ Methodist Church, New York, N. Y., 14 Dec. 1946, Miss Chely Scialom, to Lt. Comdr. Frederick Van Ness, USNR.

WAGSTAFF-FEITNER — Married in New York, N. Y., at the home of the bride's mother, 18 Dec. 1946, Mrs. Lillian Feitner, to Col. David Wagstaff, jr., USA (USMA '33).

WRIGHT-MOORE — Married in Middleburg, Va., 12 Dec. 1946, Mrs. Isabel Moore, to Lt. Gordon Wright.

Died

ASHBURN — Died at her home, Washington, D. C., 14 Dec. 1946, Agnes Davis Ashburn, wife of the late Col. P. M. Ashburn. Services at Walter Reed Chapel, 17 Dec.

ASTLE—Killed in a plane crash near Itami Air Base, Japan, 10 Dec. 1946, Capt. Ralph S. Astle.

BEAVER — Died near Palmdale, Calif., 1 Nov. 1946, Bill Black Beaver, ACMM(P)A, USN.

BERRY — Died at Asheville, N. C., 12 Dec. 1946, Lt. Comdr. George A. Berry, USNR. Services at Arlington National Cemetery, 16 Dec.

BUHRMAN—Died at the Naval Air Station, Kaneohe Bay, Oahu, T. H., 18 Nov. 1946, John Richard Buhrman, AOMAC2.

CALLAGHAN—Died at the Naval Hospital, St. Albans, L. I., N. Y., 3 Nov. 1946, Edward Callaghan, CWT, USN-Ret.

CAMPBELL — Died at Medina, Wash., 11 Dec. 1946, Vice Adm. Edward Hale Campbell, (USNA '93) retired former judge advocate general of the Navy and former commandant of the Mare Island and Puget Sound Navy Yards and of the 13th Naval District.

CLEMENT — Died at Milwaukee, Wis., 15 Nov. 1946, Albert Clement, CPHM, USN-Ret.

COWLES—Died in the Philippine Islands, 17 Nov. 1946, in a jeep accident, 1st Lt. Stuart L. Cowles, jr., CAC, (USMA '45), son of Col. and Mrs. Stuart L. Cowles of the 25th Division Artillery at Nara, Japan.

CRUM—Killed in a plane crash near Itami Air Base, Japan, 10 Dec. 1946, 1st Lt. Peter B. Crum.

DADE — Died suddenly in Kansas City, Mo., 8 Dec. 1946, former Capt. Alexander Lucian Dade, jr., AC.

DAHLSTROM — Died at Grevturegatan, Sweden, 1 Nov. 1946, Nils Robert Thure Dahlstrom, CQM, USN-Ret.

DORSEY—Died at Milwaukee, Wis., 20 Sept. 1946, Edward Francis Dorsey, ACCM, USN-Ret.

DUDEK—Died at the Naval Hospital, Guam, 14 Nov. 1946, Walter Joseph Dudek, BM1, USN.

ELLIOTT—Died at the Dispensary, Naval Operating Base, Bermuda, 18 Nov. 1946, Ens. Harold D. P. Elliott, USNR.

FAIRFIELD — Died at the U. S. Naval Medical Center, Bethesda, Md., 14 Dec. 1946, Vice Adm. Arthur Philip Fairfield, USN (Ret). Services at Ft. Myer Chapel, Ft. Myer, Va., 17 Dec. Interment in Arlington National Cemetery.

FITZGERALD — Killed in a plane crash near Itami Air Base, Japan, 10 Dec. 1946, 2d Lt. Harry D. Fitzgerald.

GORDON—Died at Portlock, Va., 18 Nov. 1946, Earl John Gordon, GM2.

GUSSE—Killed in a plane crash near Itami Air Base, Japan, 10 Dec. 1946, 2nd Lt. Henry R. Gusse.

HAY—Died at Glen Cove, L. I., N. Y., 17 Dec. 1946, Maj. Gen. William Henry Hay, USA (Ret.) (USMA '86), former commander of the New York National Guard training reservation, Camp Smith, at Peekskill, N. Y.

HELM—Died at the Naval Hospital, St. Albans, L. I., N. Y., 30 Nov. 1946, Ch. Gunner Leo Oscar Helm, USN-Ret.

HIRANO — Killed in a plane crash near Itami Air Base, Japan, 10 Dec. 1946, M.Sgt. Frederick M. Hirano.

HUTCHINSON — Killed in a plane crash near Itami Air Base, Japan, 10 Dec. 1946, S. Sgt. Robert L. Hutchinson.

JOHNSON—Died at Reading, Mass., 13 Nov. 1946, Lt. Comdr. Charles Benjamin Johnson, USNR.

JORGENSEN—Died near Muskegon, Mich., 19 Nov. 1946, Kenneth Raymond Jorgensen, GM1, USN.

KATZ—Killed in a plane crash near Itami Air Base, Japan, 10 Dec. 1946, Lt. (jg) Lester Z. Katz, USN.

KEELING—Died off Jacksonville, Fla., 15 Nov. 1946, Ens. William Morton Keeling, USNR.

KUGLER—Died at the Naval Air Station, Willow Grove, Pa., 29 Nov. 1946, Lt. (jg) John Calvin Kugler, USNR.

LINTON—Died at the Naval Hospital, Long Beach, Calif., 10 Nov. 1946, John Alfred Linton, CMoMM, USN.

MacEWAN — Died at the Naval Hospital, Long Beach, Calif., 7 Nov. 1946, Robert Frederick MacEwan, CMM, USN-Ret.

MASON — Died at the Williams Field Hospital, Mesa, Ariz., 9 Dec. 1946, William Frederick Mason, father of Col. G. L. Mason, executive officer of Williams Field.

MILLER—Died at Memorial Hospital, Lima, Ohio, 5 Sept. 1946, Herman Karl Miller, CGM, USN-Ret.

MONTE—Died of drowning in the vicinity of Saipan, 10 Sept. 1946, Michael Anthony Monte, ARM1, USN.

MORAN—Killed in a plane crash near Itami Air Base, Japan, 10 Dec. 1946, Capt. John V. Moran.

MORI—Killed in a plane crash near Itami Air Base, Japan, 10 Dec. 1946, WO Shigeru Mori.

MORRIS—Died on board the USS Columbus, 24 Nov. 1946, William Morris, CTC (PA), USN.

MOSS—Killed in a plane crash near Itami, Air Base, Japan, 10 Dec. 1946, 1st Lt. C. W. Moss, jr.

MULLIN — Killed in a plane crash near Itami Air Base, Japan, 10 Dec. 1946, 1st Lt. John E. Mullin.

OLD—Died in Norfolk, Va., 6 Dec. 1946, Mrs. Claudia Paxton Old, widow of Jonathan W. Old. Survived by her two sons, Rear Adm. F. P. Old and Jonathan W. Old, jr., City Attorney of Norfolk, and by her daughter, Elizabeth Old Barleon, wife of Capt. John S. Barleon, USN (Ret.). Mother of the late Claudia Old McKittrick, wife of Capt. H. V. McKittrick, USN (Ret.). Granddaughter of Comdr. J. S. Barleon, jr., USN, Mrs. Betty Barleon Keller, wife of Comdr. W. W. Keller, USN, and the late Lt. (jg) Richard L. Barleon, USN. Survived also by five other grandchildren and one great-grandchild. Interment, Portsmouth, Va.

OLSEN—Died at Marine Air Depot, Naval Air Technical Training Center, Jacksonville, Fla., 5 Dec. 1946, 2d Lt. Warren K. Olsen, NAVC, USMCR.

OSWALT—Died at sea, off Ream Field, 21 Nov. 1946, Ens. William Morton Oswalt, USNR.

OTA—Killed in a plane crash near Itami Air Base, Japan, 10 Dec. 1946, T.Sgt. Daniel C. Ota.

PETERSON—Died at the Naval Hospital, St. Albans, L. I., N. Y., 20 Nov. 1946, Lt. Charles Theodore Peterson, USN.

PORTER — Killed in a plane crash near Itami Air Base, Japan, 10 Dec. 1946, Lt. Col. James L. Porter, commanding officer of the Itami Air Field and the 58th Service Group.

PURRUCKER—Died at the Naval Hospital, San Diego, Calif., 21 Nov. 1946, Robert Bruno Purrucker, CWT, USN-Ret.

REDDING—Killed in a plane crash near Itami Air Base, Japan, 10 Dec. 1946, Capt. Harry A. Redding.

SCHAEFFER—Died at U. S. Naval Hospital, Bethesda, Md., 15 Dec. 1946, Capt. Donald Norton Schaeffer, USNR, stationed in the office of the Under Secretary of Navy, husband of Mrs. Virginia Schaeffer.

SHARP—Died at Columbus, Ohio, 27 Nov. 1946, Mrs. Ellen Beverley Sharp, widow of the late Capt. Frederick Dent Sharp, USA wife of Colonel Mallory, FA, USA, Maj. Gen. William F. Sharp, USA (Ret.), and Col. Frederick Dent Sharp, USA.

SLAVIN—Died at Green Cove Springs, Fla., 16 Nov. 1946, William Andrew Slavin, CQM, USN.

SMOOT — Died at his home, Pasadena, Calif., 16 Dec. 1946, B. R. Smoot, father of Capt. R. W. Smoot, USN, of Washington, D.C.

SNYDER — Killed in a plane crash near Itami Air Base, Japan, 10 Dec. 1946, 2d Lt. James E. Snyder.

SPANN — Died suddenly in San Juan, P. R., 22 Nov. 1946, Mrs. Pauline Clayton Spann, wife of Col. George F. Spann, QMC. She is survived by her husband, two daughters, Miss Leonard D. Spann, and Miss Helen R. Spann; and a son, Capt. Frederick C. Spann, FA. Services in the Post Chapel, Ft. Myer, Va., 14 Dec. Burial in Arlington National Cemetery.

TREAS—Died in Ashland, Va., 11 Nov. 1946, Carlos Treas, CST(AA), USN-Ret.

WALCUTT — Died in Ft. Hayes Hospital, Columbus, Ohio, 17 Dec. 1946, Brig. Gen. Charles C. Walcutt, jr., (USMA '86) former chief of the Bureau of Insular Affairs at Washington. Burial in Arlington National Cemetery, 23 Dec.

WALKER — Died at the Naval Hospital, Naval Station, Norfolk, Va., 7 Nov. 1946, Lt. (jg) Richard Ives Walker, USN.

WASHBURN — Died while on sick leave in Spokane, Wash., 13 Dec. 1946, Capt. Thomas Solon Washburn, SC, USNR.

WINGFIELD—Died at Okinawa, 17 Nov. 1946, Lt. (jg) Ernest Conway Wingfield, USN.

WORTHLEY—Killed in a plane crash near Itami Air Base, Japan, 10 Dec. 1946, S.Sgt. Raymond V. Worthley.

WULFEKUHLE—Died of injuries in the Pearl Harbor Naval Shipyard, 2 Nov. 1946, Francis John Wulfekuhle, EM2, USN.

YAMAZAKI—Killed in a plane crash near Itami Air Base, Japan, 10 Dec. 1946, T.Sgt. Thomas Yamazaki.

Falvey Granite Company, Inc.

Monuments for Arlington and other National Cemeteries. Largest equipment for carving lettering in cemetery, by hand or Sand Blast.

Designs & Price List on request.

209 Upshur St., N. W., Wash., D. C.
Phone TAylor 1100

Obituaries

Vice Adm. Arthur P. Fairfield, USN (Ret.), who remained on active duty during the war on a special assignment with the Maritime Commission, died at the Naval Hospital, Bethesda, Md., 14 Dec. He was buried in Arlington National Cemetery 16 Dec.

Admiral Fairfield was born in Saco, Me., 29 Oct. 1877, and entered the Naval Academy in 1897. During the Spanish-American War, he served at sea as a naval cadet, and was graduated in 1901.

After tours of duty at sea and ashore, including duty at the Naval Academy, he assumed command of the USS McDougal in 1915. When the United States entered World War I, the McDougal joined U. S. forces based at Queenstown, Ireland, and the then Comdr. Fairfield was awarded the Navy Cross for her part in convoy duty.

In January 1918, he fitted out and commanded the USS Gregory, for eight months. Subsequent assignments were in all fields of naval science, and included command of the USS Argonne, consecutive commands of a destroyer division and a destroyer squadron, in charge of Ships Movements Division, Office of CNO, first commanding officer of the USS Chester, Assistant Chief of the Bureau of Navigation, commander of a cruiser division, commander of a battleship division, and as a member of the General Board.

He served a year as Assistant Chief of Naval Operations.

Admiral Fairfield was transferred to the retired list 1 Nov. 1941, but remained on duty with the Maritime Commission and War Shipping Administration.

He is survived by his wife, Mrs. Nancy Fairfield, 2400 16th Street, N. W., Washington, D. C.

—o—

Capt. Donald Norton Schaffer, USNR, special assistant to the Under Secretary of the Navy, died 15 Dec. at the Naval Hospital, Bethesda, Md., after a brief illness. He was buried 17 Dec. in Arlington National Cemetery.

Before being commissioned a lieutenant in March, 1942, Captain Schaffer had specialized in corporation law with offices in Chicago, and had been admitted to practice before the U. S. Supreme Court.

Captain Schaffer held several important assignments on the staffs of fleet and force commanders, and subsequently served on board the USS Midway. He reported as special assistant in legal affairs to the Hon. John L. Sullivan in April, 1946, and went with him to Mr. Sullivan's new post as Under Secretary.

Captain Schaffer is survived by his wife, Mrs. Virginia Schaffer, and two sons, Robert Warren and James Randle, all of 10 Farragut Ave., Kensington, Md.

—o—

Mrs. Clementine "Jeff" Haughey passed away at the U. S. Naval Hospital, San Diego, Calif., on 22 May 1946.

She was a native of Montreal, Canada, and was a Veteran of World War I, having served in the U. S. Navy with tht Cable Censor at New York and in the Office of the Commandant of the Third Naval District, and was a Member of San Diego Post No. 6 of the American Legion. In World War II, she served as Volunteer Supervisor in the American Red Cross Surgical Dressings Unit at the Naval Training Center in San Diego.

Solemn Requiem High Mass was held in the Catholic Church of Saint Vincent de Paul in San Diego and interment with Full Military Honors took place in Fort Rosecrans National Cemetery in San Diego.

She is survived by her husband, Lt, Comdr. James S. Haughey, USN (Ret.), of San Diego, who desires to express his grateful thanks and deep appreciation for all the many flowers and many kind expressions of sympathy which were received. Comdr. Haughey has been in the Regular Navy for nearly 30 years. They were married in 1916.

—o—

Funeral services for Alexander Lucian Dade, jr., of Tulsa, Okla., were held in Arlington National Cemetery, Thursday, 12 Dec. 1946

Mr. Dade was a captain in the AC during World War I and in recent years has been vice president of the Deep Rock Oil Company in Tulsa. He died suddenly on Sunday, 8 Dec., in Kansas City, Mo., en route from Tulsa to New York City on a business trip. In addition to his widow, who is the former Mildred Huston, he is survived by a sister, Mrs. Margaret Dade Hutchinson of Evanston, Ill.

—o—

Maj. Gen. William Henry Hay, USA-Ret., died at Glen Cove, L. I., N. Y., 17 Dec., at the age of 86.

General Hay was a classmate, at the United States Military Academy of General of the Armies John J. Pershing. He fought in the Spanish-American War, on the Mexican border in 1916, and in World War I.

Surviving are his wife, Mrs. Edith Carmen Hay; three sons, Thomas R., William W. and Edward N. Hay; thirteen grandchildren and three great-grandchildren.

—o—

The many friends of Mrs. Ellen Beverley Sharp, widow of the late Capt. Frederick Dent Sharp, USA-Ret., will regret to hear of her passing away at Columbus, Ohio, 27 Nov. 1946.

Mother Sharp, as she was lovingly known, made her home with her son-in-law and daughter, Col. and Mrs. John S. Mallory, FA, USA.

Besides her daughter, she is survived by two sons, Maj. Gen. William F. Sharp, USA-Ret. of Monkton, Md. and Col. Frederick Dent Sharp, USA on duty at GHQ in Tokyo, Japan, five grandchildren, two great grandchildren. Her brother and sister, Mr. James Rumsey Beverley and Mrs. W. E. Teare of 600 Cook Street, Denver, Colo., also survive her.

Mrs. Sharp was born at San Antonio, Tex., 12 Feb. 1861. Married in 1881, she served with her husband at various frontier Army posts from Texas and Arizona to Montana and the Dakotas, experiencing the rigors and hardships incident to those days. Widowed in 1900, she provided a home for her three children until they were able to take care of themselves. From that time she made her home with her children who were in the Service. She was very fond of the Army and often spoke of her continuous service of 65 years. 1881 to 1946.

She would have been 86 years old 12 Feb. 1947. Interment was at the National Cemetery Ft. Leavenworth, Kans., Sunday afternoon 1 Dec., the Episcopal Post Chaplain, Major Marsh, officiating.

FOR YOUR FRIENDS IN THE ARMED FORCES AND FOR THEIR HOME FOLKS!

Racking your brains for a PERSONAL Christmas gift when every dollar counts for living expenses and the purchase of war bonds, there is a grand solution: A present of the ARMY AND NAVY JOURNAL.

A subscription to the ARMY AND NAVY JOURNAL for husband, brother or sweetheart means that for fifty-two times in the coming year your Xmas thought will be refreshed in the mind of the recipient. It will be appreciated by the soldier, the sailor or the airman.

Because, in the weekly ARMY AND NAVY JOURNAL there will be found all the news so vital to their welfare.

Because, all Executive and Congressional acts will be reported in its columns.

Because of its publication of all official circulars and reports and matters of service interest.

Because of its discussion of foreign relations.

Because of its forthright editorials.

Because, going on 83 years young, it vigorously and forcefully advocates all policies important to the welfare of the Services and with equal vigor and force opposes those harmful to them.

Because it tells of developments in connection with demobilization and job opportunities in civil life.

Because Home Folks can be kept fully informed of all matters concerning their relatives in uniform.

To insure prompt delivery of this exceptional CHRISTMAS GIFT simply clip and mail the attached coupon immediately:

ARMY AND NAVY JOURNAL, INC.
1711 Connecticut Avenue, N. W.
Washington, 9, D. C.

I enclose coupon with my check for $5.00 for one year's subscription to the ARMY AND NAVY JOURNAL, to be sent with a Christmas card to:

Name .....

Address .....

.....

Army Orders

(*Continued from Page* 390)

1st Lt. Michael C. Jacobs, CAC.
1st Lt. Morris W. Meullier, CAC.
Capt. Donald J. Murray, CAC.
1st Lt. Jordan E. Norman, CAC.
1st Lt. John W. Pinnick, CAC.
Capt. John C. Rembijas, CAC.
Col. Harold W. James, Inf.
Capt. John J. Maykovich, CAC.

To Hickam Fld, Oahu, TH

1st Lt. John W. Hoover, Sig C.

To AFMIDPAC, Ft. Shafter, TH

1st Lt. R. O. Myers, Sig C.
Maj. R. B. Ellis, Sig C.
CWO Pander Hildebrand.
WOJG William H. McDaniel.
1st Lt. Edward C. Mattie, AUS.

To Panama Canal Dept.

1st Lt. Benjamin J. Cox, QMC.
Capt. A. B. Zeledon, QMC.
CWO L. P. Arbour, USA.
Maj. L. B. Amick, Inf.
Maj. C. R. Russel, QMC.
Capt. Nathaniel H. Israelson, CAC.
Capt. Bruce G. Masteller, CAC.
Maj. Joseph R. Pickett, Inf.
Capt. Joseph R. Svec, FD.
Capt. Michael Verbosh, CAC.
Capt. Edward E. Walters, Inf.

To PCD, Quarry Heights, CZ

Col. William B. Foster.

To USAF MTO

1st Lt. Jacqueline M. Arnic, ANC.
2d Lt. Dorothy A. Bowman, ANC.
1st Lt. Rita F. Burr, ANC.
2d Lt. Walterina L. Dziewicki, ANC.
2d Lt. Mary J. Ford, ANC.
1st Lt. Helen M. Hagan, ANC.
1st Lt. Phyllis J. Hocking, ANC.
1st Lt. Mildred D. M. Lang, ANC.
1st Lt. Ruth M. Lutz, ANC.
1st Lt. M. Anna McCallum, ANC.
1st Lt. Anne J. Margelewska, ANC.
1st Lt. Mary E. Pierce, ANC.
1st Lt. Norma M. Pollo, ANC.
1st Lt. Lillian M. Portner, ANC.
Lt. Col. Beatrice M. Quin, ANC.
1st Lt. Eileen W. Reichert, ANC.
1st Lt. Anna Rozycki, ANC.
2d Lt. Christine E. Reinsch, ANC.
1st Lt. Veronica R. Shade, ANC.
1st Lt. Helen E. Vargo, ANC.

To Alaskan Dept.

Capt. Paul W. Aman, CAC.
Lt. Col. Delmer P. Anderson, FA.
1st Lt. Harold B. Anderson, CAC.
Capt. Donald A. Atkinson, AUS.
1st Lt. Joe Baker, FA.
Capt. Albert E. Barends, jr., FA.
Capt. George F. Barrett, FA.
Capt. Henry Butherus, Inf.
1st Lt. Goedo R. Catania, CAC.
1st Lt. John A. Chandler, CAC.
Capt. Paul W. Costinett, Inf.
1st Lt. Harold R. Cushing, FA.
Capt. Grover C. Driver, jr., FA.
Capt. Walton L. Edwards, FA.
Capt. George W. Everman, Inf.
Capt. Fred A. Gioglio, FA.
1st Lt. Gerard A. Gobeille, CAC.
1st Lt. John A. Goddard, Inf.
1st Lt. Ralph C. Gould, FA.
Capt. Hiram H. Griffith, CAC.
Capt. Gaylon B. Harvey, Inf.
Maj. James H. Heizer, CAC.
Capt. Tony S. Henderson, FA.
Maj. William J. Higgins, Inf.
Capt. James K. Hope, jr., Inf.
Maj. Milford A. Koehler, FA.
Capt. Francis R. McEnany, FA.
1st Lt. Paul D. O'Gwynn, CAC.
Maj. Wilford A. Reaper, Inf.
1st Lt. Woodrow C. Schmidt, FA.
1st Lt. Eugene H. Scott, FA.
Capt. Elmer L. Vinson, CAC.
2d Lt. Powell E. Way, jr., CAC.
1st Lt. Woodrow K. Bluntzer, OD.
Capt. Charles W. Burdick, OD.
1st Lt. Roy M. Desnoyer, QMC.
1st Lt. Melvin S. Falck, QMC.
Capt. Elmer G. Fortenberry, OD.
1st Lt. John C. Hilliard, OD.
Capt. Henry G. Kirks, OD.
1st Lt. Robert J. Kiser, OD.
Capt. Allen B. Lawrence, OD.
1st Lt. Paul W. Mathews, OD.
Maj. Charles C. Merrifield, OD.
Capt. Ellsworth A. Metheny, OD.
Capt. Einar A. Midland, OD.
1st Lt. John C. Neely, QMC.
1st Lt. Charles C. Osborne, FD.
1st Lt. Orrin W. Potter, OD.
1st Lt. Charles L. Rogers, OD.
1st Lt. Earl W. Shaw, QMC.
1st Lt. Isadore I. Spector, QMC.
1st Lt. Philip L. Spooner, OD.
Capt. Richmond A. Walker, OD.
Capt. Joseph F. R. Barli, QMC.
1st Lt. William K. Callagy, QMC.
1st Lt. Frank W. Cathey, QMC.
Capt. John W. Crocker, FD.
1st Lt. Robert H. Davis, jr., QMC.
1st Lt. Jay W. Denany, QMC.
1st Lt. Robert J. Gerrard, QMC.
Maj. Charles F. Henderson, QMC.
1st Lt. James M. Holmes, QMC.
2d Lt. Louis M. Jost, QMC.
1st Lt. Gregory M. Juenger, OD.
Capt. William Livingston, QMC.
1st Lt. Eldridge McCormack, QMC.
Capt. Walter W. McNamara, QMC.
Maj. Neflian O. Nelson, QMC.
Maj. George D. Pace, QMC.
Capt. Eugene E. Ramsdell, QMC.
Lt. Col. Elvyn A. Robb, QMC.
Capt. Philip Rork, QMC.
1st Lt. Harold B. Schneider, QMC.
1st Lt. Carl F. Schomburg, QMC.
1st Lt. LeVaughan L. Simpson, QMC.
Capt. L. M. Tanton, QMC.
Col. Roland O. S. Akre, AC.

To Nanking Hqs Comd

Maj. George W. Akers, OD.
Lt. Col. Joseph T. Caples, MC.
Lt. Col. James B. Evans, FA.
Lt. Col. David T. Jellett, QMC.
Lt. Col. Harolde T. Loftin, CMP.
Lt. Col. Lawrence D. McIntosh, Cav.
Lt. Col. Paul F. Roberts, Inf.
Col. Leslie W. Stanley, AGD.
Maj. J. E. Vick, jr., CE.

To Nanking, China

Lt. Col. Norman H. Adams, CE.
Maj. Carl A. Looney, CE.

To Antilles Dept., San Juan, P. R.

1st Lt. Janet Lockwood, MDPT.

To Jamaica, BWI

2d Lt. Ralph C. Zarate, Sig C.

To Army Security Agency, Europe

2d Lt. William H. Anglin.
2d Lt. Guy A. Sparkman, Sig C.

To USFET

Capt. Robert E. Bachman, AC.

To Frankfurt, Germany

1st Lt. Howard J. Kisinger, Inf.
2d Lt. Howard M. Ferguson, AUS.
2d Lt. Paul W. Jastrow, AUS.
2d Lt. John D. Haggard, AUS.
2d Lt. Eric Paepcke, AUS.
1st Lt. Charles F. Pettit, AC.

To Caserta, Italy

Lt. Col. James P. Irvine, Inf.
2d Lt. John J. Fortera, AUS.

To Vienna, Austria

1st Lt. Zenon R. Malaniak, Inf.

Non-Commissioned Officers

RETIRED

M.Sgt. J. H. Atchison, DEML.
M.Sgt. R. C. McCurdy, DEML.
M.Sgt. G. M. Tomlinson, FA.
M.Sgt. J. V. Hendrix, AAF.
M.Sgt. L. Keller, QMC.
M.Sgt. T. A. McDermott, Inf.
T.Sgt. J. S. Kindur, CMP.
T.Sgt. H. M. Riddle, MD.
T.Sgt. C. Zanoni, QMC.
S.Sgt. P. Hitchcock, OD.
Sgt. J. Kieler, OD.
M.Sgt. A. J. Akins, Inf.
M.Sgt. D. G. Bonnewell, DEML.
M.Sgt. J. M. Castelucia, OD.
M.Sgt. C. M. Crosby, CAC.
M.Sgt. R. P. Davis, FA.
M.Sgt. R. Davis, Inf.
M.Sgt. E. Dawson, CE.
M.Sgt. L. Dowell, FA.
M.Sgt. L. F. Humphries, TAS.
M.Sgt. G. J. Keating, jr., Inf.
M.Sgt. H. B. McGuen, DEML.
M.Sgt. F. J. Landon, QM.
1st.Sgt. W. Albertson, Inf.
T.Sgt. G. W. Cleveland, QMC.
T.Sgt. J. E. Cummings, OD.
T.Sgt. A. G. Lesswing, DEML.
S.Sgt. C. L. Brown, QMC.
S.Sgt. A. J. Lanoutte, QM.
S.Sgt. P. Rosado, Inf.
S.Sgt. C. S. Secrest, OD.
S.Sgt. O. J. Yeager, CAC.
Sgt. H. Atkinson, DEML.
Sgt. J. Barna.

(*Please turn to Next Page*)

Navy Orders
(Continued from Preceding Page)

Tec 4 B. Kelly, OD.
Sgt. F. A. Gemme.
Sgt. Z. Rivera-Rodriguez, Inf.
Tec 4 C. L. Paige, CAC.
Tec 5 J. Due, TC.
M.Sgt. M. J. Quigley, AAF.
M.Sgt. W. R. Rhodes, AAF.
M.Sgt. G. W. Rice, AAF.
M.Sgt. H. E. Ritter, AAF.
T.Sgt. A. Petto, AAF.
T.Sgt. G. G. Sharpe, AAF.
Cpl. C. Hood, AAF.
M.Sgt. R. M. Shoap, AAF.
T.Sgt. G. Wigington, AAF.
T.Sgt. G. A. Reeves, DEML.
M.Sgt. B. Sanders, DEML.
T.Sgt. R. Alfaro.
M.Sgt. M. R. Alexander, AAF.
M.Sgt. G. T. Moore, Cav.
M.Sgt. H. R. Morgan, QMC.
M.Sgt. E. B. Nicely, CAC.
1st Sgt. A. V. Boyle, Inf.
1st Sgt. J. Hernandez, Inf.
1st Sgt. T. Lottary.
1st Sgt. F. D. McMaster.
1st Sgt. A. A. Roberts, Inf.
1st Sgt. M. A. Savino, OD.
T.Sgt. P. Nein, MD.
T.Sgt. G. R. Poarch, QMC.
S.Sgt. J. H. Bryant, Cav.
S.Sgt. J. F. Nungesser, MD.
Tec.3 M. McIlvain, CAC.
Sgt. C. I. Nelson, Inf.
Sgt. M. Sadosky, DEML.
M.Sgt. G. E. Foster.
M.Sgt. R. C. Henderson.
M.Sgt. E. E. McNeill.
T.Sgt. K. P. Downie.
M.Sgt. S. Fitzpatrick, DEML.
M.Sgt. D. A. Miller, CAC.
M.Sgt. J. Santiago.
1st Sgt. T. P. Farrel, Cav.
S.Sgt. B. J. Gutowski, Inf.
M.Sgt. P. Kornet.
M.Sgt. M. A. Marinchak.
M.Sgt. J. Hampton, AAF.
M.Sgt. D. D. Dobbs, DEML.
1st Sgt. R. L. Fishel, CAC.
1st Sgt. W. Lewis.
1st Sgt. S. Pyrch.
T.Sgt. S. Mercado, Inf.
Sgt. L. L. Gard, CMP.
Sgt. W. D. Gribble, Inf.
Sgt. R. F. Hawley, CE.
Tec.4 E. H. Flarkoski.
M.Sgt. M. M. Jordan.
M.Sgt. E. P. Leonard.
M.Sgt. V. Mick.
1st Sgt. F. M. Schweighofer.
T.Sgt. C. P. Karr.
M.Sgt. C. H. Baird, QMC.
M.Sgt. T. B. Baker.
T.Sgt. M. J. Urban, TC.
Tec.3 J. J. Rivera.
M.Sgt. V. Fitzgerald, OD.
1st Sgt. E. Rice, CAC.
M.Sgt. J. M. Giganti, AAF.
M.Sgt. M. J. Holland, FA.
M.Sgt. T. E. Kane.
M.Sgt. C. A. Kastle.
M.Sgt. C. W. Scarbrough, FA.
M.Sgt. F. D. Wright, Cav.
1st Sgt. E. Harper, Cav.
1st Sgt. S. B. Rothgeb.
1st Sgt. C. T. Williams, Inf.
T.Sgt. A. Anderson, QMC.
T.Sgt. E. Graniela, AGF.
T.Sgt. C. R. Jones, Inf.
T.Sgt. R. Sheppard, Inf.
S.Sgt. G. Angel.
S.Sgt. L. S. Gault, CAG.
S.Sgt. A. Johnson.
S.Sgt. D. Sesto.
Pvt. P. C. Hader.
M.Sgt. S. W. Kirkwood.
M.Sgt. E. C. Napper.
M.Sgt. C. E. Reece.
M.Sgt. M. Salazar, Inf.
S.Sgt. J. A. Boyles.
S.Sgt. A. A. Rouillard.
M.Sgt. E. S. Barrett, CAC.
M.Sgt. J. R. Knowles.
M.Sgt. E. P. Duncan, OD.
M.Sgt. R. Maxwell, OD.
M.Sgt. L. H. Nokes, Inf.
M.Sgt. P. J. Porter, Inf.
M.Sgt. J. A. Regan, FA.
1st Sgt. W. C. Bunch, CE.
1st Sgt. R. Howell, CAC.
M.Sgt. J. J. Reardon.
M.Sgt. R. M. Rice, MD.
S.Sgt. F. Novak, CE.
M.Sgt. S. Baniszewsky.
M.Sgt. P. J. Burk.
M.Sgt. N. Cardwell, Inf.
M.Sgt. C. A. Caron, FD.
M.Sgt. R. J. Desborough.
M.Sgt. R. F. Etley.
M.Sgt. S. Hammer, SigC.
M.Sgt. C. A. Kottman, MD.
M.Sgt. A. A. Martz, Cav.
M.Sgt. J. R. Polly.
T.Sgt. C. Abbott, TC.
T.Sgt. R. C. Norris.
T.Sgt. L. Shone.
T.Sgt. C. G. Stewart, OD.
S.Sgt. H. Cole.
S.Sgt. G. E. Francis, Inf.
S.Sgt. V. J. Klumb.
S.Sgt. J. W. Stambaugh, Inf.
Sgt. J. Price.
Sgt. R. W. Prince, QMC.
Tec.4 R. Davis, MD.
Tec.4 W. D. Southard.
Tec.5 L. Hawkins.
Pfc. C. J. Smith.
M.Sgt. J. Adams.
M.Sgt. M. I. Gilligan.
M.Sgt. A. E. Rhodes.
Sgt. D. C. Dutton, FA.

Naval Supply Depot
(Continued from First Page)

Special Devices Section; (3) an ordnance modification shop for the modification of guns, mounts, bomb racks, etc., and (4) a preservation unit for the preservation of aircraft engines and BuShips repair parts in storage.

The largest special project operating at the NSD is the preservation of Internal Combustion Engine and Hull and Machinery repair parts for long-term storage and overseas equipment. At the present time, the NSD is conducting an experimental project involving the dehumidification of several 200′ x 600′ warehouses in order to measure the value of this method of preservation of material with the various other methods now in use.

The Ships Parts Control Center is the controlling agency for Bureau of Ships Internal Combustion Engine and Hull and Machinery repair parts for the operation and maintenance of the Fleet. As a Supply-Demand Control Point, the Ships Parts Control Center is responsible for the global control of procurement, distribution, expediting, cataloging, redistribution, and declaration of surpluses of Bureau of Ships repair parts. A Ships Parts Inventory Control Plan is in operation to maintain effective inventory control over procurement, storage, and distribution of, as well as to determine requirements for, approximately 220,000 items currently stocked in the Ships Parts Supply System. The Ships Parts Control Center effects the identification and classification of all ships' parts within the System; establishing nomenclature and stock numbers, determining interchangeability, and developing and distributing catalogs for all items of ships' repair parts. The Ships Parts Control Center is also responsible for effecting standard methods and procedures for stock record keeping, instructions relative to preparation and processing of requisitions, establishment of stock levels, and procedures for stock status reporting. By utilization of Stock Status Reports from the various stocking activities and future operational plans, the Ships Parts Control Center: (1) accomplishes redistribution of existing stocks between stocking activities; (2) diverts or cancels quantities due under contracts by shipment modifications; (3) determines net requirements; and (4) directs the declaration of surplus for disposal. NSD, Mechanicsburg, is a primary stocking point for major items of Internal Combustion Engine and Hull and Machinery repair parts under cognizance of the SPCC.

Christmas Services

Chaplain (Maj. Gen.) Luther D. Miller, Army Chief of Chaplains, will deliver the Christmas Eve Sermon, highlighting religious services for the Christmas season scheduled for the Post Chapel, Fort Myer, Va. Chaplain (Col.) Father Patrick Ryan, Deputy Chief of Army Chaplains, will conduct Catholic services on Christmas Day.

The Protestant Christmas Eve Service will be conducted by candlelight in the Post Chapel commencing at 11.30 P.M. During the services the Fort Myer all-male choir composed of members of The United States Army Band directed by Chief Warrant Officer Samuel R. Loboda will present a program of Christmas music.

Celebration of the Holy Communion with Chaplain Miller officiating as the Celebrant will mark the close of the services. Chaplain Gregory J. Lock will assist with the Celebration of Holy Communion.

On Christmas Day, Solemn High Mass will be celebrated in the Fort Myer Post Chapel commencing at 11.00 A.M. Chaplain Father Patrick Ryan will deliver the Sermon. The Holy Name College choir of Washington directed by Frater Conall Hart will sing the Mass and will render other selections throughout the services. In addition, Low Mass will be celebrated at 8.00 A.M. and Low Mass and Carol Singing at 9.00 A.M.

Third Army Hq. Association

The Third U. S. Army Headquarters Association held its second monthly get-together at a noon luncheon recently in the General Officers' Dining Room at the Pentagon.

Maj. Gen. Robert M. Littlejohn, War Assets Administrator, addressed the group, outlining plans for the erection of a statue of General George S. Patton, jr., which will probably be located at the U. S. Military Academy. General Littlejohn is Chairman of the Board of Trustees of the General George S. Patton, jr., Memorial Association which is collecting funds for the project.

Ex-Third Army Headquarters officers present at the luncheon were:

Lt. Gen. Lucian K. Truscott, jr., former Third Army Commander, War Department, Washington, D. C.; Lt. Gen. LeRoy Lutes, War Department General Staff; Maj. Gen. A. M. Gruenther, Deputy Commander, National War College, Washington; Maj. Gen. Robert M. Littlejohn, War Assets Administrator, Washington; Col. George R. Barker, with Office Director of Organization and Training War Department; Colonel Don Carleton, Ft. Meade, Md.; Col. Charles E. Cheever, Hq. Fourth Army, San Antonio, Tex.; Col. Robert S. Allen, 1525 28th Street, N.W., Washington; Col. Edward C. Wallington, Office Chief Chemical Corps; Col. David H. Tulley, War Department Special Staff; Col. John B. Coates, Army Medical Center, Washington; Col. John Hyatt, QM, Washington; Col. Frank P. Corbin, jr., Office of the Undersecretary of War; Lieutenant Colonels Robert E. Joseph, Hq., Military District of Washington; Carl T. Dubuy, Office of The Surgeon General; Albert S. Branson, War Department General Staff; W. T. Weissinger, War Department General Staff; Lloyd R. Salisbury, War Department General Staff; H. A. Franklin, 630 Gramatan Avenue, Mt. Vernon, N. Y.; Raymond C. Luna, War Department, Washington; Dave Kennedy, War Department, Washington; Charles G. Pirkle, c/o Benson Printing Company, Nashville, Tenn.; William C. Burry, Washington, D. C., Merle S. Hotchkiss, War Department General Staff; Majors George Mumane, jr., Brookville 767 Syosset, Long Island, New York; Everett E. Smith, National Gallery of Art, Washington; Meridith E. Allen, Office of The Undersecretary of War; Major Mueller, Aide to General Truscott; Captains Carl E. Veitenthal, jr., 4626 New Hampshire Avenue, N.W., Washington; Beverley Simms, Interstate Commerce Commission, Washington; and A. E. Snyder, Office War Assets Administration.

All former members of Third U. S. Army Headquarters interested in joining the Association should write to Lt. Col. Robert E. Joseph, Secretary, Room 5C478—the Pentagon, Washington 25, D. C.

Colonel Joseph is interested in obtaining snapshots or photographs of all former personnel of Headquarters Third U. S. Army for inclusion in a special souvenir book and requests that pictures with appropriate identification and description be mailed to him.

Selected for USN Nurse Corps

The tenth of a series of lists of Naval Reserve nurses selected for transfer to the Navy Nurse Corps was announced in Alnav 624. The following are appointed in their present temporary ranks on 16 Dec.:

K. E. Armstrong	Carolyn Fleet Maher
Harriet M. Barnes	Helen Marie Mathison
Rosella H. Booth	Zena Rose Mattie
T. Annie Braden	Annette L. Morris
Mary Gladys Bryden	Virginia M. Napoli
Minerva Alice Butt	Harriet A. Nelson
Dorothy Marjorie Day	Violet Marie Nelson
Mildred Louise Ellis	Catherine M. O'Brien
Catharine T. Goggin	Pearl J. Perry
Verna H. Halstead	Agnes J. F. Pinkas
Georgia B. Hopkins	Mary A. Prescott
Margaret Jennings	Edna Alice Reeves
Hester M. Jones	Edith Marie Richard
Rachel J. Kindelan	Irene Inez Schanz
Betty Lee Kinsey	Lillian B. Schoonover
Mary E. Kline	Clara May Snyder
Nellie Kozoil	Aurene E. Steinberg
Arleen Ella Lahr	D. P. A. M. Van Gorp
Ruby Ann Lamkin	Ann Rose Walsh
Patricia Mae Lanng	Marion E. Weden
Wilma Ledbetter	

Naval Reserve Nurses Needed

The Navy requests applications from Naval Reserve nurses now on inactive duty to fill 200 billets for a minimum of one year's active duty.

CLASSIFIED

Rate: 9 cents per word; minimum $1.00. Forms close 5 p. m. Wednesdays. Payment must be made before publication. Phone Hobart 6477.

REAL ESTATE FOR SALE

40 acres on Piankatank River and large navigable creek. One of the loveliest and most unusual locations in Tidewater, Virginia. Home has 9 rooms, one full bath and two half baths. It is on an elevation with large lawn to water. Garage and other buildings. Price $22,500. G. B. Lorraine, Law Building, Richmond 19, Virginia.

Pre-revolutionary home restored and modernized located on river in splendid village in Tidewater, Virginia. Spacious grounds with fine old trees and shrubbery. Price $25,000. Photos and details on request. G. B. Lorraine, Law Building, Richmond 19, Virginia.

REAL ESTATE

VIRGINIA TOWN AND COUNTRY HOMES. 300 Page Historic Virginia Magazine $1. ROY WHEELER REALTY COMPANY. The Virginia Real Estate Clearing House, Charlottesville, Virginia.

Samuel T. Stewart, Realtor, Sundial Village #5, Hyannis, Mass. Personal and confidential service in purchase, sale and rental of Cape Cod Real Estate.

Virginia Tidewater farms. Homes, Cottages & Business Water front properties Specialty. All sizes and price range. Easy long terms. Low interest rate finance. Free catalogue. W. C. Brooks, Realtor. Phone 89F3, Box 383, Tappahannock, Virginia.

ARE YOU RETIRING? Come to Florida and let us solve your problem. Town and Suburban Properties, Groves and Farms. Col. Gordon H. McCoy (Ret.) Realtor, Dixie Grande Hotel Bldg., Bradenton, Florida.

Property Management devoted exclusively to Army-Navy Personnel for your property in the Washington, D. C. Area. Let us manage your property, sell it, or see us for buying in the Washington-Virginia Area. Col. J. Fuller Groom, 3102 10th Road, North, Arlington, Virginia, Tel. Owens 6077.

WASHINGTON, D. C., Real Estate—Loans—Insurance. Special Service for Service People. D. A. HANES CO., Inc. Phone Michigan 3350, Evenings, Holidays Hobart 4732. Suite 2, 1600 20th St., N. W.

REAL ESTATE

BRADENTON, FLORIDA. This city is called "air-conditioned" because so many bodies of open water materially affect both the summer and winter climate. The members of the rapidly growing colony of retired service families are attracted by this unusually fine climate. Booklet and map of Bradenton also list of retired officers living here sent on request. City and suburban homes, also beautiful waterfront building sites. Write "ARMY WIFE," MRS. C. R. WATKINS, with WYMAN, GREEN and BLALOCK, Inc.

BRADENTON, FLORIDA

One year old frame bungalow, 4 bedrooms, bath, hallway—closets and storage space. Living room, dining room, kitchen, front and back screened porches. 1 car garage and wash house. Nicely landscaped. Near schools. Price, Furnished, $12,000.00. WALTER S. HARDIN REALTY CO., REALTORS, Hardin Building, Bradenton, Florida.

ALBUQUERQUE BUSINESSES

Chicken Shack—$3,300; Dry Cleaning Plant—$18,000; Tourist Court and Service Station—$7,000; Cafe and Service Station—$16,000; Gift and Childrens Shop—$2,000; Tourists Courts—$40,000 to $110,000. Stewart with Carmichael, Realtor, 2406 E. Central, Phone 2-8167.

WEST POINT SONGS

BOOK: 120 pages, words, music, cloth binding; $1.50 postpaid. Send check: F. C. Mayer (Editor). Organist, West Point, New York. Perfect Christmas remembrance.

FOREIGN LANGUAGE DICTIONARIES

Dictionaries and Grammars for 102 languages. Catalog free. Schoenhof's, Box 6, Harvard Square, Cambridge, Massachusetts.

FINANCIAL

INCOME TAX LOANS — Regular Commissioned officers. Write for particulars. The Mechanics Bank, Richmond, California. Member Federal Deposit Insurance Corp.

Marine Units Cited

Award of the Presidential Unit Citation and the Navy Unit Commendation to Marine Corps units which participated in the Iwo Jima campaign in February, 1945 has been approved by the Secretary of the Navy.

Secretary Forrestal authorized the Presidential Unit Citation for all assault troops of the Fifth Amphibious Corps who landed on Iwo under command of Lt. Gen. Harry Schmidt for the period 19-28 Feb. To supporting troops of the Fifth Corps, at Iwo, the Navy Unit Commendation was awarded for the same period.

Assault troops included:

The Third Marine Division, Reinforced, less the Third Marines; Ninth Marines, Twenty-first Marines, Third Regular Battalion, less detachments; Third Tank Battalion; Third Joint Assault Signal Company, less detachments; Reconnaissance Company, Headquarters Battalion, Third Marine Division; Liaison and forward observer parties, Twelfth Marines and pilots and air observers, VMO-1.

Also Fourth Marine Division, Reinforced; Twenty-third Marines; Twenty-fourth Marines; Twenty-fifth Marines; Companies "A", "B" and "C", Fourth Tank Battalion; Companies "A", "B" and "C", Fourth Engineer Battalion; First Joint Assault Signal Company: First, Second and Third Platoons; Military Police Companies, "B" and "C", Fourth Pioneer Battalion; Tenth Amphibian Tractor Battalion; Fifth Amphibian Tractor Battalion and Reconnaissance Company, Headquarters Battalion, Fourth Marine Division.

Also Companies "A", "B" and Detachment Headquarters Company, Second Armored Amphibian Battalion; Seventh Marine War Dog Platoon; pilots and air observers, VMO-4; liaison and forward observer parties, Fourteenth Marines; First Provisional Rocket Detachment; Fifth Marine Division, Reinforced; Twenty-sixth Marines; Twenty-seventh Marines and Twenty-eighth Marines.

Also Fifth Engineer Battalion; Fifth Tank Battalion; Sixth War Dog Platoon; Fifth Joint Assault Signal Company; Third Amphibian Tractor Battalion; Eleventh Amphibian Tractor Battalion; Companies "A", "B" and "C", Fifth Pioneer Battalion; Reconnaissance Company, Headquarters Battalion; Fifth Marine Division; First Second and Third Platoons, Military Police Company, Headquarters Battalion, Fifth Marine Division; Third Provisional Rocket Detachment; pilots and air observers, VMO-5; liaison and forward observer parties, Thirteenth Marines and Companies "C", "D" and Detachment Headquarters Company, Second Armored Amphibian Battalion.

The Presidential Unit Citation was also awarded Marine Fighting Squadron 214, for air operations against the enemy at Guadalcanal, Munda, Northern Solomons, Vella Lavella, and Torokina.

Support troops at Iwo Jima included all troops not assigned to assault landings.

The Navy Unit Commendation was also awarded the following organizations:

Third Marines, Third Marine Division for Empress Augusta Bay Beachhead, Bougainville; Twelfth Marines, Third Marine Division, for Empress Augusta Bay Beachhead and Guam, Marianas Islands; Sixth Marine Defense Battalion, Fleet Marine Force, for Midway; South Pacific Combat Air Transport Command (SCAT).

FINANCE ⊠ MERCHANT MARINE

Financial Digest

The problems which industry faces in the months ahead were discussed recently by C. E. Wilson, president of General Motors Corporation, at the 53d Annual Dinner Meeting of the Illinois Manufacturers Association in Chicago.

Some of the problems, Mr. Wilson said, would have existed if there had been no war, but they have been accentuated and complicated by the war. He listed as among the major problems the following six:

"1. Organized unemployment and restricted production resulting from the policies of rival union bosses and labor dictators, and the unsound economic policies of unions as expressed by most union spokesmen.

"2. Material shortages resulting from the war, and the lack of capacity production since the war, principally due to strikes and union activity.

"3. Increased working capital requirements resulting from unbalanced inventories which have resulted from the uncertainty and irregularity of supply, and the increased price level.

"4. Increased fixed capital required due to the higher cost of tools, plants and facilities, and an important increase in fixed overhead expenses due to such higher costs.

"5. The difficulty of keeping costs and prices in balance, and threatened further inflation.

"6. The exceedingly high national debt resulting from the war, and the failure to balance the budget in the decade before the war, together with the continuing huge federal budget and the excessively high federal taxes which these conditions impose."

"While I have listed these six problems facing industry," Mr. Wilson said, "the first, the labor problem, and the last, the fiscal problem, are basic, and the others largely result from these two."

Mr. Wilson said that in developing new laws or modifying old ones affecting unions and workmen generally they must be economically, ethically and socially sound, enforceable, practicable and understandable. They must too, he said, recognize the principle that we can all have more only if we produce more and recognize that the right to work is superior to the privilege of striking.

Merchant Marine

A general discussion of problems affecting America's post-war merchant marine was held 13 Dec. by the Maritime Commission and representatives of the shipping industry, headed by Mr. Almon E. Roth, president of the National Federation of American Shipping.

The meeting brought together a major representation of the industry and the Maritime Commission for the first time since the outbreak of war. The Commission said it believed such meetings to be mutually beneficial and that they will result in a strengthening of the post-war merchant fleet.

The conference pointed the way to a more complete understanding of the Government's and industry's joint problems, the Commission said, and expressed a desire to hold similar discussions of this sort in the future.

An RCA radar set in use aboard the Great Lakes ore-carrier A. H. Ferbert prevented a collision between two other vessels during a recent heavy snowstorm on Lake Superior, according to the Radiomarine Corporation of America

The rapidly converging positions of the vessels, the J. H. Sheadle and the Sascatu, were detected on the Ferbert's radar indicator by one of her officers, who radioed the ships of their danger and directed each on a change of course.

Eighty-eight marine sextants, originally purchased from private owners for war use, have been offered for sale by the Maritime Commission for $50 each or in lots of 10 at $25 each, "as is, where is."

The assortment includes both domestic and foreign makes with silver inlaid, black lacquered brass frames, power telescopes, various length arcs, and individual mahogany cases. Each instrument is complete and has been reconditioned and approved by the Naval Observatory.

The Maritime Commission has also offered for sale 31 LCT's (March 6) at the fixed price of $10,000 each, with the recommendation that they be used for operation on inland waterways and other shallow waters, for cargo or livestock.

Band RTC Will Close

Discontinuance of the Band Replacement Training Center, Camp Lee, Va., with final close-out of the unit effective 25 Feb., was announced by Headquarters, Army Ground Forces 7 Dec.

One Organization of the Army and the Navy

BY THE HON. JOSEPHUS DANIELS
Secretary of the Navy, 1913-1921

IF unhappily the world should again be cursed by a war between great powers—(I profoundly believe that through bitter experience civilized people have learned a lesson which insures no repitition in our generation)—one thing is certain: There will be no decisive battle fought or important engagement in which units of the air, the sea and land will not participate as one force.

This is no prophecy. It is but recognition of the new character of warfare that has eliminated the old-time divisions when the air was regarded as important chiefly as eyes of the sea and land forces; when sea battles were fought alone by the Navy, as at Trafalgar and Jutland, and when land soldiers waged great battles, as at Waterloo, Gettysburg and Chateau Thierry, with no aid from any other fighting unit. World War II, following some advance by World War I, has made obsolete old tactics, old strategies, old theories which had stood unchallanged as almost axiomatic since the tiremes of Carthage and Rome grappled in the Mediterranean, or Ceaser wrote: *"veni, vidi, vici,"* or Napoleon called the roll of his troops at the base of the Pyramids—we have seen these replaced almost overnight. Not since Hitler plunged Europe into the most destructive war in history has there been any decisive engagement by the air, sea or land forces fighting separately. The war we have just won was amphibious, triphibious, aerial, aquatic, subterranian, terranian, atomic-waged on land and sea and in the sky with weapons never dreamed of before. But at no time could it be said that any arm alone could have overcome the foe at any early date. We were enabled to celebrate victory only because in the exigency of war all of our forces were obliged to become a mighty power working together as one. We learned, but only when necessity compelled, the lessons of unity and the conjunction of all under one direction and the necessity to end costly duplication, the truth of the Scriptures: "For the body is not one member but many. They are many members, yet but one body."

This Scripture, liberally interpreted calls upon The Army and The Navy to hasten the day when it shall be said: "Now ye are one body."

The construction of the mammoth Pentagon Building foreshadowed the coming of the day when it would house all the offices and officials now quartered in a number of widely separated buildings. No militarist in the highest flight of the imagination of a great standing army could think that in peacetime its officers would not be lost in the mazes of that great edifice. Whether understood at the time of the erection, is it not clear that the Pentagon Building was constructed big enough to house under one roof all the services that direct national security and defense? What stands in the way? Only this one thing: Devotion to tradition and fear of displacement or change. As to the first, I am confident that the glory won in battle can never be dimmed by proclaiming the bans and uniting the Army and Navy in the holy bonds of wedlock. As to the second, those who are actuated by fear of change, I would say in the words of the great War President beloved by all free men all over the world: "The only thing to fear is fear." Tradition and fear are the enemies of progress and efficiency. There will be no loss of the examples of Washington and Dewey because the Army and Navy are one. On the contrary, the glory of land and sea and air heroes will belong alike not only to all in the armed forces but to all Americans.

The Pentagon Building is an argu

(*Please turn to Next Page*)

SPECIAL FINANCING SERVICE

TO OFFICERS AND CERTAIN GRADES OF NONCOMMISSIONED OFFICERS

Army — Navy — Marine Corps — Coast Guard — Public Health Service
By an Organization Founded Twenty-two Years Ago for the Purpose of Rendering Financial Assistance to Officer Personnel at the Lowest Possible Rates. It Will Pay You to Investigate.

FEDERAL SERVICES FINANCE CORP.
Home Office
718 Jackson Place Washington, D. C.

BRANCH OFFICES:
Warrington, Fla. Carpenter Bldg.
Panama City, Fla. 405 Harrison Avenue
Long Beach, Calif. Ocean Center Bldg.
Corpus Christi, Texas Med.-Professional Bldg.
Honolulu, T. H. Pier 11 Bldg.
Columbus, Ga. #5 Chancellor Bldg.

The UNITER POLICY
GIVES YOU COMPLETE
LIFE INSURANCE PROTECTION

SAVES MONEY
COSTS LESS

It's new—different. Designed exclusively for officers of the Armed Forces and their wives and children, the Uniter Policy gives complete protection in peace and war. In this policy the United Services Life Insurance Company has combined the best features of all known forms of life insurance.

For information concerning this new policy, send your name, rank, organization, date of birth, and address to the Home Office.

UNITED SERVICES LIFE INSURANCE COMPANY
WASHINGTON D. C.

1600 20th St., N. W. Washington 9, D. C.

USUAL AND UNUSUAL

SIGNATURE LOANS
TO REGULAR OFFICERS

$50 Up To $1200

Payments as low as $8.50 per month per $100.00, including complete life insurance coverage on the loan. Our liberal credit policy and quick Airmail service will please you.

* * *

THE LIBERTY PLAN COMPANY
107-109 No. Broadway
Oklahoma City 2, Oklahoma

ESTABLISHED 1895
Serving for 51 years
REGULAR OFFICERS with LOANS
without endorsement

By Air Mail or Wire (upon request). Strictest Privacy. Long-term payments. Legal Rates. W. H. HOFHEIMER CO. INC., 300-A Citizens Bank Bldg., Norfolk 10, Va., Phone 41833.

P.S. You'll appreciate our broad credit-viewmore liberal than a bank—no "red tape." We understand the officer better.

Urge Army Intelligence Corps

A special House committee studying the National War Effort has recommended that Congress grant permanent statutory recognition to the Central Intelligence Group as security agent for the federal government, but with a civilian at its head.

In addition, in order that a national intelligence service may have the services of officers well versed in that field, it was recommended that the Army "examine further the question of the establishment of an Intelligence Corps for the training, development, and assignment of especially trained officers."

The House group recommended that, with some changes, President Truman's directive which created the CIG last January be enacted into law, establishing the Central Intelligence Group as a separate government agency instead of its present status as a joint enterprise of the State, War, and Navy Departments.

The Central Intelligence Group would then receive appropriations direct from Congress and have complete control over its own personnel. At present the CIG receives its appropriations as grants from the three Departments, and its personnel are assigned by the Departments in a similar manner.

Although the Director of Central Intelligence might be an Army or Navy officer "in civilian clothes," he should be appointed by the President by and with the consent of the Senate, according to the House committee. Lt. Gen. Hoyt S. Vandenberg is Director of the CIG at present.

In connection with its recommendation for a civilian head, who would serve a preliminary term of two years and a permanent term of 10 years at a minimum salary of $12,000 annually, the House committee state:

"A civilian would be less subject to the control or criticism of any military establishment, less likely to have ambitions in another direction, would be more in keeping with American tradition, would be more symbolic of the politico-military nature of the problem posed by intelligence in peacetime; furthermore, there is nothing to keep a qualified Army or Navy officer from accepting the post in civilian clothes, and there is every desire, by setting the tenure of office at 10 years and making the salary substantial, to make the post attractive to one who has learned intelligence thoroughly in the Army, Navy, or Foreign Service of the State Department. Continuity of service is recognized as very important."

The creation of the present CIG was recognized in the committee report as "the one great step (that) was taken that all who were interested in intelligence seemed to want." It was noted that the President's directive was carefully prepared and had the support of the interested agencies.

In a discussion of the possibility of establishing an Intelligence Corps of the Army, the committee reported:

"On November 11, 1945, a special committee of the War Department began a series of hearings on intelligence matters. A score of officers were heard, among them some of the most experienced intelligence officers in the Army. Highly instructive discussions were held.

"One question brought up over and again was whether or not there should be an Intelligence Corps—similar to the Engineer Corps—in the Army. Obviously, there was no agreement on this point, which was to be expected with so many officers of wide experience and strong opinions participating. But there was agreement that intelligence requires individual officers of the highest caliber, that the Army must take more determined steps to provide officers who are specialists in intelligence without losing the experience provided only by combat, that intelligence should be made a career and selected officers receive highly specialized training, that the service schools should do their part to instruct officers with a flair for long-range thinking along geopolitical, military-political, and psychological lines. They agree that the prestige of intelligence must be deliberately built up throughout the Army. They agree that there must be emphasis on continuity in intelligence, and therefore personnel, should not be subject to the usual cuts suffered by other units of the Army in peacetime, on the sound theory that—as stated in the beginning of this report—it is in peacetime that intelligence must be counted on to perform its most valuable work.

"A study of the evidence presented at these hearings would lead to the conclusion that the formation of an Intelligence Corps or service, so designed that it would produce trained intelligence officers without losing their proper integration with the rest of the Army, might be desirable."

When you move, notify the Army and Navy Journal of your change of address so you will not miss any issues.

Sports Front

Make no mistake about it; Navy has a pretty sharp basketball team this winter. As indicated in this space last week, the Midshipmen should more than hold their own in the fast circles which comprise their opposition.

In what may be described as a pre-Christmas warm-up, Hampden-Sydney and William and Mary were met and conquered on 14 Dec. and 18 Dec. respectively. (For the benefit of those not familiar with Virginia Collegiate Institutions, the above represent but two opponents.)

The scores of the two games were: Navy 71, Hampden-Sydney 40; Navy 50, William and Mary 36.

Hampden-Sydney was met in the somewhat incongruous setting of Christmas hop decorations some six hours before said hop was due to start. Santa beamed down from a huge chimney, but he had no largess for the hapless visitors. Except for the last few minutes of the first half, when Navy's reserves permitted a large lead to be whittled down to a six point margin, the Annapolitans had matters all their own way.

The William and Mary game was considerably closer. After going into an early lead, Navy retained but a single point of it at the half. Even this slim margin was erased as W & M sank a field goal at the start of the second session, but then Shugart, Waldrop and Co. took over, plowing ahead steadily till they possessed a 14 point pull at the final whistle.

The two games brought out a number of facts about Navy's team, some of them good and others detrimental.

On the asset side are Navy's speed, aggressiveness and soundness of plays and fundamentals, which is just another way of saying they have been well drilled by Coach Carnevale. In the second half of the Hampden-Sydney game especially, Navy's ball handling left the opposition as bewildered as a Podunk Corners team confronted with the Harlem Globe Trotters.

Foremost among the debits is the lack of height on the starting five. Only Barrow and Waldrop measure up to what has become the average in collegiate basketball. It has become platitudinous to say that a good big team can beat a good little team, but Navy will have its work cut out for it if it hopes to disprove the old adage.

Next comes the lack of qualified reserves. With the exception of Woods, who has shown to advantage, the gap in ability between the subs and the starting five of Shugart, Robbins, Waldrop, Dick, and Barrow is somewhat dismaying.

Of course this lack of replacement strength is offset by another very important asset—condition. As is the case with all service academy teams, the Navy five is in top shape and quite capable, we believe, of playing the full forty minutes of every game on the schedule. Considering this, maybe five men, three of them short in stature, will be sufficient material to give Coach Carnevale an outstanding season. Such a turn of events wouldn't surprise us.

The holiday hiatus in athletic activity (basketball and otherwise) will terminate on Wednesday 8 Jan., when a reputedly strong George Washington quintet invades Annapolis.

Present Strength of Fleet

Despite severe reductions in the Fleet from its imposing wartime strength, the Navy is still strong enough to back up American diplomacy, Fleet Admiral Chester Nimitz said this week.

The Chief of Naval Operations told the Charleston, W. Va., Chamber of Commerce 16 Dec, he thinks "we are prepared to meet any emergency that might confront us." Although the Navy is only at one seventh of its wartime strength, he said, "it probably is more than we need" but is good "national insurance" to have on hand.

"The knowledge of the strength we have," Admiral Nimitz declared, "enabled our distinguished Secretary of State, Mr. Byrnes, to speak so persuasively at the conferences he attended."

Until the United Nations finally proves its success, he said that the United States must maintain "a very powerful fleet to keep the world on an even keel."

Benefit Eligibility

Men entering the Army at the present time are still eligible for the dependency benefits under the Servicemen's Dependents' Allowance Act, Maj. Gen. W. S. Paul, War Department Director of Personnel and Administration, said 20 Dec.

"There appears to be some misinterpretations of the Armed Forces Voluntary Recruitment Act of 1946 which have led many men to believe that the dependency allowance provisions of the law expired on 1 July 1946," General Paul said. "This is not the case. Anyone joining the Army at the present time may collect allowances for his dependents.

"The principal distinction between men enlisting or being inducted before and after 1 July is that those joining the Army before that date are guaranteed dependents' allowances for the entire term of their enlistment, while those joining after that date may collect these benefits only for the duration of the present war plus six months."

Shipment of Personal Effects

The Navy has cancelled an emergency wartime measure permitting shipment of personal effects from outside the continental limits without application or supporting papers, and has reinstated prewar regulations requiring applications supported by certified copies of orders.

After 1 Jan. 1947, shipment of personal effects—including household effects—at government expense will be limited to commissioned and warrant officers on permanent change of station, and enlisted men of the first three pay grades on reenlistment or permanent change of station.

Supply Officers will require applications and certified copies of orders as prescribed in chapter nine volume two of the Bureau of Supplies and Accounts Manual.

Transportation Corps

Maj. Gen. Edmond H. Leavey, Chief of Transportation, announced that the Transportation Corps is proceeding with plans, directed by the War Department, to establish an Overseas Replacement Depot and Personnel Center at the New Orleans Port of Embarkation. The New Orleans Port Staging Area at the New Orleans Army Air Base on the shores of Lake Pontchartrain will be the location of these two activities.

The Personnel Center activities will include Reception Station functions for personnel returning through New Orleans Port of Embarkation for ZI reassignment, and separation functions for separatees returning through New Orleans Port of Embarkation. It is planned to provide for an average separation processing rate of 75 personnel per day.

USMA Memorial Fund

A Memorial Fund has recently been made available to the U. S. Military Academy to assist in preparing the son of a deceased officer of the Regular Army for entrance to the Military Academy. Preference will be given to sons of deceased officers who lost their lives during the past war. Interested applicants should write the Adjutant General, U. S. Military Academy, inclosing a transcript of their school records and personnel data as to age, weight, height, etc.

Marine Corps Warrants

The Marine Corps has cancelled its call for recommendations of non-commissioned officers of the first three pay grades for promotion to warrant officer.

Twentieth Air Force

Hq., Pacific Air Command, Tokyo — Brig. Gen. Frederick M. Hopkins, former commanding general of the Twentieth Air Force, Guam, has been named commanding general of the Pacific Air Service Command, Manila, replacing Brig. Gen. F. O. Carroll.

One Organization of the Army and the Navy

(Continued from Preceding Page)

ment for unity. If all the forces of preparedness for war are not housed there when the Army is reduced to its peacetime proportions, much of that building will echo to emptiness. Its size speaks for its occupation for all charged with the direction of national defense.

(Raleigh, N. C.)

New Division Organization

(Continued from First Page)

Devers said, "will continue to provide, in fulfillment of its primary mission, the highly mobile, hard-hitting combat units which were so spectacularly successful in breakthrough and exploitation in the recent war."

"In World War II," General Devers said, "V-2 rocket attacks upon our troops and the civilian population in Belgium and England did not stop until our ground forces had penetrated to the launching sites, destroyed the Nazi covering forces, and demolished the sites and stockpiles.

"In any future war the mission of our ground forces would be the same. Attacks upon the civilian population of the United States itself would not cease until our Army's ground forces—infantry, armored cavalry and artillery — descended upon the enemy's airfields, launching sites, depots and factories to seize or destroy them.

"Atomic and other weapons will not alter the nature of warfare to such an extent that the ground combat need for a versatile, mobile and hard-hitting division will be diminished or altered." General Devers continued.

"The infantry division will remain the versatile combat unit of a field Army, organized basically for hard-hitting shock action. It will have a degree of training in special operations that will permit its rapid conversion for jungle, arctic, desert or mountain fighting, and for movement by motor, ship or plane."

Greater emphasis is being placed on recoilless weapons. A 3.5 bazooka has replaced the former 2.54 model.

The approved changes in division organization were based on recommendations submitted by former division and unit commanders, the General Board of the European Theater of Operations which sat at Bad Nauheim in 1945-46, and the Infantry, Armored and Artillery Conferences held at service schools last spring.

The divisions as now planned might well be considered interim divisions as many changes may be necessary within the next few years.

It is expected that changes in the Airborne division, which have also been under study for some time and probably will consist of increases in strength and firepower, will be announced in the near future.

The Airborne division will continue to have a definite place in the post-war Army. While the Infantry division which is completely air transportable is the ultimate goal of planners, the Airborne will continue to be an organization specifically trained to effect landings in enemy territory. On the other hand, the air transportable Infantry division would land its troops only after suitable landing strips have been captured and made secure.

In its official announcement, the War Department said:

The New Infantry Division

"The war strength American infantry division of the future will number between 17,000 and 18,000 officers and men, an increase of more than 3,000 over its World War II strength.

"The more important changes include:

"(1) Inclusion of an organic tank battalion.

"(2) Inclusion of an organic antiaircraft artillery battalion.

"(3) Addition of two more howitzers to each of the twelve firing batteries of the division artillery, increasing its firepower 50 per cent.

"(4) Reduction of the Infantry squad from twelve to nine men.

"(5) Addition of a fourth company and a bridge platoon to the engineer battalion.

"Included in each regiment will be a headquarters company, a service company, and three battalions consisting of a headquarters company, heavy weapons company and three rifle companies each; a tank company (in addition to the headquarters and three combat companies of the organic battalion under division control); a heavy mortar company armed with the 4.2 mortar, and a medical company.

"Eliminated as a result of this new

(Please turn to Back Page)

New Division Organization

(Continued from Preceding Page)

alignment will be the anti-tank and cannon companies, and the collecting company which was a part of the divisional medical battalion.

"During World War II, especially in the Mediterranean and European theaters, each division habitually had separate battalions of tanks and antiaircraft artillery detailed to provide it with their types of specialized support. Tactically, this arrangement proved sound, but administratively it left much to be desired. By including these battalions organically in the division, it is believed that greater efficiency may be achieved.

"The inclusion, however, of a company of tanks in each regiment as well as a battalion in the division means that the number of tanks working with the division as a whole will be doubled. In World War II each division usually had three tank companies working with it, but the division of the future will have six, armed with the big M-26 'General Pershing' tank mounting a 90-mm. gun.

"All of the additions to the new division will, of course, be armed with the latest weapons. There is no better illustration of this policy than the antiaircraft artillery battalion. In the last war, the AAA Battalion was provided with towed 40-mm. Bofors guns. In the future, it will have self-propelled carriages mounting either quadruple .50 caliber machine guns or dual 40-mm. guns. It will be under the control of division artillery.

"Division artillery will still consist of three battalions of 105-mm. howitzers and one battalion of 155-mm. howitzers, but the number of pieces in each firing battery will be increased from four to six. Combat experience indicated that a battery could handle six guns without materially increasing its command and administrative overhead. This increase will give the division fifty-four 105 howitzers and eighteen 155 howitzers. During World War II all artillery in the infantry division was towed; it still is towed, but it is contemplated that towed guns will be replaced with self-propelled guns as soon as suitable models are developed.

"A reduction in the size of the infantry squad from twelve to nine men was made because combat experience indicated that a squad leader could not control more than eight other men in battle. The future squad will have besides its leader, an assistant squad leader, five riflemen, a Browning Automatic Rifleman and the latter's assistant.

"A fourth company has been added to the engineer battalion to give the division a spare. One company is habitually detailed to work with each regimental combat team, to afford close, front-line support. When the battalion had only three companies, the division frequently was left without any engineers to handle other than front-line jobs. The added bridge platoon will have certain types of bridging material heretofore issued only to corps and army engineer units.

"The new divisional medical battalion has been greatly reduced in size and scope. During World War II it had, besides its headquarters company, three collecting companies and one clearing company. The litter sections have been removed from the collecting companies and given to the regiments to achieve better control and services. The ambulance platoons of the old medical battalion's collecting companies have been combined to form an ambulance company.

"Three changes have been made in the division special troops. The old headquarters for special troops has been abolished. The recent creation of a military police company in certain divisions has been standardized. A replacement company, supervised by seven officers and thirty-one enlisted men, has been added; this company's job will be to receive the division's replacements and prepare them for their battle assignments.

"Several important types of equipment have been increased in the division, or added to it. During World War II, all liaison planes were in division artillery, but an experimental increase from ten to sixteen planes is standard in the new setup. The additional 'grasshoppers' will be assigned one to each regiment and three to division headquarters.

"Radar equipment, which has been supplied to an interim-type division, has been made organic to the headquarters of division artillery and each regiment, to facilitate the location of enemy artillery and mortars. Forty-two 75-mm. and eighty-one 57-mm. recoilless rifles will be included in the division's armament.

The New Armored Division

"The U. S. armored division of the future will consist of approximately 15,000 officers and men, and will undergo an important change in its command organization. Modifications will be made to fit peacetime restrictions of personnel and materiel. During the war, combat elements of the division were grouped under Combat Commands 'A' and 'B', and a small fraction held for contingencies under Combat Command 'R', or Reserve. The new setup will substitute a Combat Command 'C' headquarters for the old reserve headquarters, creating three command headquarters of equal capabilities.

"During the war the United States had sixteen armored divisions, all of which saw action in either the Mediterranean or European theaters, and many in both. Thirteen of these had an authorized strength of 10,000, but the 2nd and 3rd Armored Divisions were activated under a table of organization which authorized 14,000. The 1st Armored Division fought in Africa and part of the way through Italy with an authorized strength of 14,000, before reorganizing on the same basis as the majority of the divisions.

"Regardless of the type of organization, combat experience indicated conclusively that the ratio of infantry to tanks was insufficient. To remedy this shortcoming, an entire battalion of infantry will be added to the division, and the strength of each existing infantry battalion will be increased from three to four rifle companies, increasing the number of rifle companies from nine to sixteen.

"As with the infantry division, the armored division infantry squad will be reduced in size, but in this case to ten men. The tenth man will drive the squad's full-tracked personnel carrier.

"An added heavy tank battalion will be equipped with the M-26 'General Pershing' tank. Like the division's three medium tank battalions, it will consist of three tank companies of four platoons each, making the tank battalions of the armored division identical with the tank battalions of the infantry division.

"The M-26 has recently been classified as a medium tank, but will be issued to the heavy battalions until a new heavy tank is brought out.

"Artillery and antiaircraft battalions are also added to the armored division, under control of division artillery headquarters. The additional artillery battalion will be equipped with eighteen self-propelled 155-mm. howitzers, and each of the other three battalions will have eighteen self-propelled 105-mm. howitzers. The antiaircraft battalion will have sixty-four self-propelled weapons, half of them quadruple .50 caliber machine guns and the other half dual 40-mm. guns.

"Other additions to the division include a bridge company and an additional line company for the engineer battalion, and a supply battalion of two truck companies. A major deletion will be the tank destroyer battalion which was habitually detailed to work with the division in combat; its work will be taken over by the extra tank battalion with its 90-mm. guns.

"The division special troops will include signal, military police, replacement and headquarters and service companies. The division trains will consist of a headquarters company, an ordnance maintenance battalion of a headquarters and three maintenance companies, and a medical battalion of a headquarters and three medical companies. The supply battalion will be included in the division trains.

"An important change in equipment will be the addition of 530 full-track personnel carriers to transport the infantry. During the war, the armored infantry rode into battle in half-tracks.

"The division will lose twenty-eight light tanks, but will gain 130 medium tanks, for a total strength in mediums of 325."

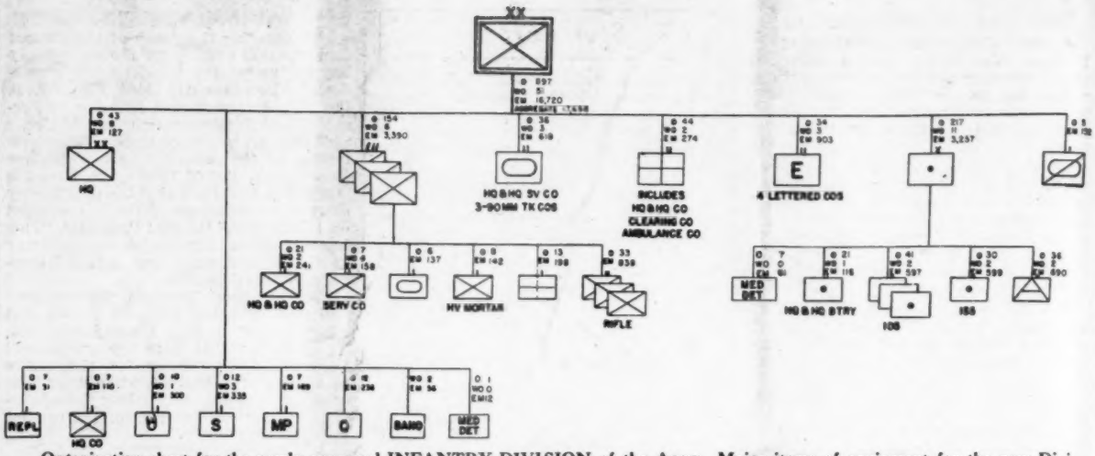

Organization chart for the newly approved INFANTRY DIVISION of the Army. Major items of equipment for the new Division will be as follows:

A—Airplane, Liaison	16
E—Boat, Utility, Medium	2
E—Bridge, Floating, M4A2	250 ft.
E—Compressor, Air, Truck-Mounted	6
E—Crane, Truck-mounted, 4-8 ton, Powered	5
E—Power-Plant, 5-kw, Trailer-Mounted	1
E—Semitrailer, Low Bed, Front-Loading, 20-ton	4
E—Shop Equipment, Motorized, General Purpose	1
E—Tractor, Diesel-Driven, 35 to 40 DBJP	1
E—Tractor, Diesel Engine Drive, 61 to 90 DBJP	6
E—Trailer, Full Low Bed, 8-ton	1
E—Trailer, Utility, Pole Type, 2½-ton Type 1	13
E—Vehicle, Engineer, Armored, Tank-Dozer Type	7
E—Water Purification Equipment, Diatomite, Portable, 35 GPM, Set No. 3	4
E—Welding Equipment, Set No. 1, Electric Arc, Trailer Mounted	1
M—Truck, 2½-ton, Dental Laboratory	1
O—Car, 5-Passenger, Medium, Sedan	1
O—Carriage, Motor, Multiple Gun M16	32
O—Carriage, Motor, Twin 40-MM Gun, M19	32
O—Carrier, Personnel, Full Track, Armored	17
O—Gun, Machine, Cal. 30, Heavy	60
O—Gun, Machine, Cal. 30, Light	147
O—Gun, Machine, Cal. 50	297
O—Howitzer, 105-MM	54
O—Howitzer, 155-MM	18
O—Mortar, 60-MM	81
O—Mortar, 81-MM	39
O—Rifle, 57-MM Recoilless	81
O—Rifle, 75-MM Recoilless	42
O—Tank, Light, with Armament	9
O—Tank, Medium, M26	129
O—Tank, Medium, M45	12
O—Tractor, Medium, M5	24
O—Truck, ¼-ton	926
O—Truck, ¾-ton, Ambulance, KD	32
O—Truck, ¾-ton, Weapons Carrier	210
O—Truck, 1½-ton, Cargo	178
O—Truck, 2½-ton, Cargo	448
O—Truck, 2½-ton, Cargo, SWB	112
O—Truck, 2½-ton, Dump	48
O—Truck, 2½-ton, Signal Corps Repair	2
O—Truck, 2½-ton, Small Arms Repair	1
O—Truck, 4-ton, Cargo	1
O—Truck, 4-ton, Wrecker	7
O—Truck, 6-ton, Prime Mover	4
O—Truck, Wrecking, Heavy	4
O—Vehicle, Tank Recovery	8
O—Vehicle, Utility, Armored, M-44	17
W—Mortar, Chemical, 42 inch	24

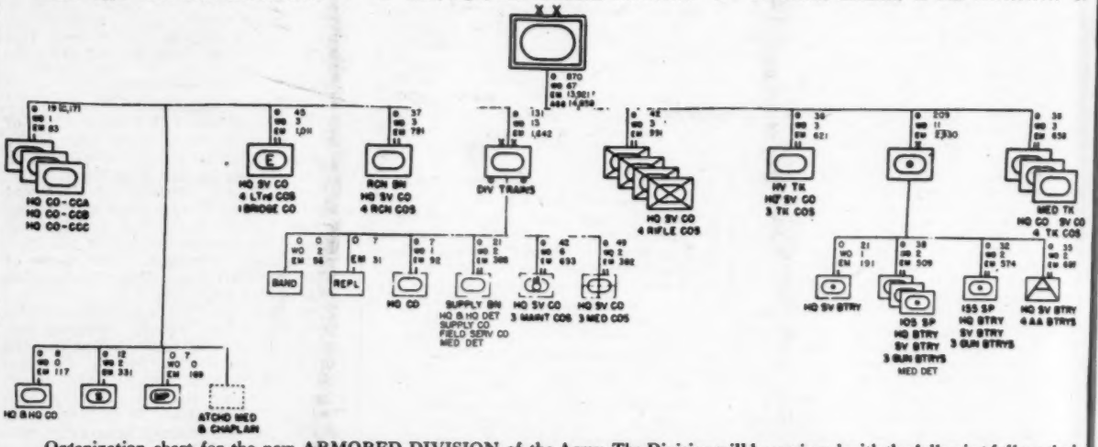

Organization chart for the new ARMORED DIVISION of the Army. The Division will be equipped with the following full tracked vehicles: 58 Light Tanks (M-24); 216 Medium Tanks (M4A3E8); 63 Medium Tanks (M-26); 24 Medium Tanks (M-45); 32 M-16 quad 50 Cal.; 32 M-19 Dual 40 MM; 54 105 MM SP; 18 155 MM SP; 28 Vehicle Tank Recovery; 530 Full Track Personnel Carriers, and 12 Full Track Eng. Spec. Vehicles.